Ashur University College

Civil Engineering Department

STRENGTH OF MATERIALS

Second Class

2018 – 2019

First Semester

CH. 5 : *TORSION*

Introduction:

Torsion refers to the twisting of a straight bar when it is loaded by moments (or torques) that tend to produce rotation about the longitudinal axis of the bar. Its effect is of primary concern in the design of drive shafts used in vehicles and machinery, and for this reason it is important to be able to determine the stress and the deformation that occur in a shaft when it is subjected to torsional loads.

For instance, when you turn a screwdriver as shown in the figure, your hand applies a torque T to the handle and twists the rod of the screwdriver.

An idealized case of torsional loading is pictured in the figure which shows a straight bar supported at one end and loaded by two pairs of equal and opposite forces. The first pair consists of the forces $P1$ acting near the midpoint of the bar and the second pair consists of the forces $P2$ acting at the end. Each pair of forces forms a **couple** that tends to twist the bar about its longitudinal axis. The **moment of a couple** is equal to the product of one of the forces and the perpendicular distance between the lines of action of the forces; thus, the first couple has a moment $T1=P1d1$ and the second has a moment $T2=P2d2$. The SI unit for moment is the newton meter (N.m).







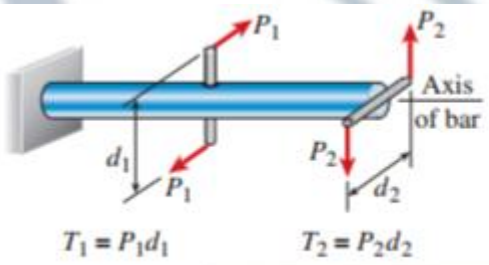

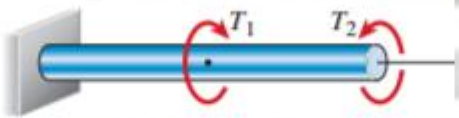



When the torque is applied, the longitudinal grid lines originally marked on the shaft tend to distort into a helix, that intersects the circles at equal angles. Also, all the cross sections of the shaft will remain flat and they do not warp or bulge in or out. The radial lines remain straight and rotate during this deformation. Provided the angle of twist is *small*, then the length of the shaft and its radius will remain practically unchanged.

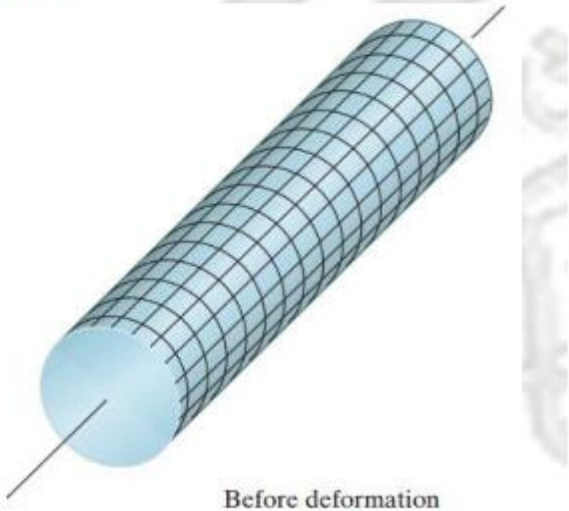

Before deformation

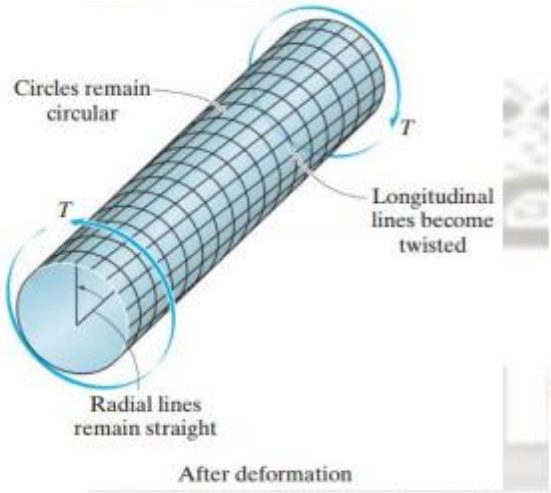

After deformation

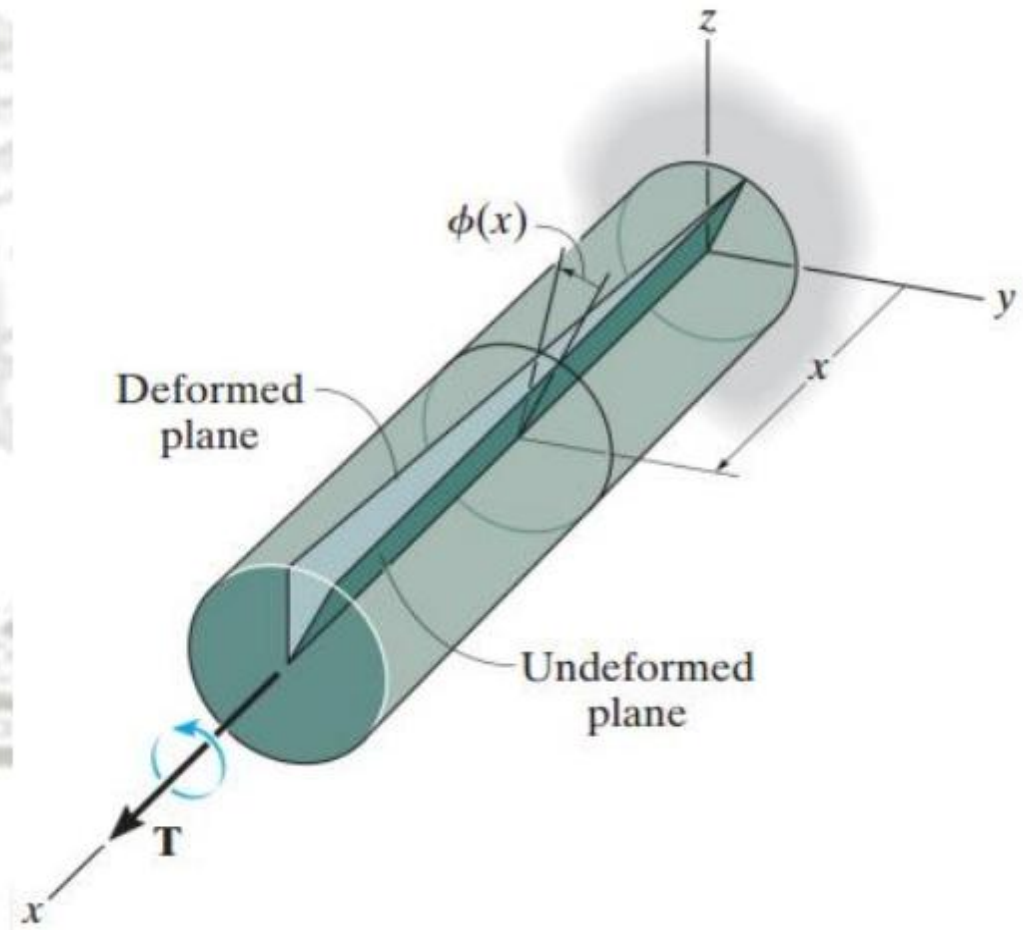

The angle of twist $\phi(x)$ increases as x increases.

Torsion Formula of Circular Sections

Assumptions:
1. A plane section before twist remains plane after twist.
2. The distribution of shear strain (γ) through the section is linear.
3. The material of the body is linear elastic.

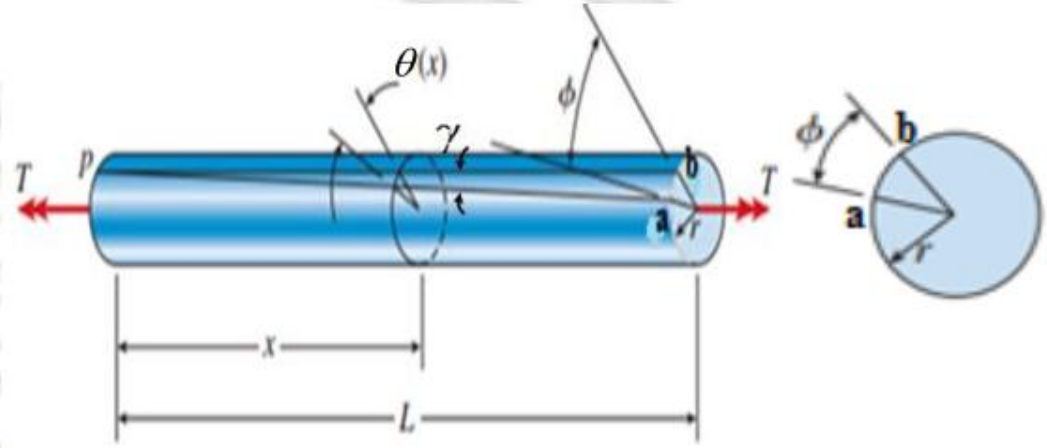

Arc length $ab = r\phi$

And $ab = L\gamma$

$$\gamma_{\max} = \frac{r\phi}{L}$$

And $$\tau_{\max} = G\gamma_{\max} = G\frac{r\phi}{L}$$

Torque= stress x area x arm

$$dA = 2\pi\rho d\rho \quad , \quad (\rho = r)$$

For a bar in **pure torsion**, the total angle of twist φ, equal to the rate of twist times the length of the bar that is:

$$\phi = \theta \times L$$

$$T = \int_{area} 2\pi\rho.\tau.\rho d\rho = \int_{area} 2\pi\rho.G\rho\theta.\rho d\rho$$

$$T = 2\pi G\theta \int_0^r \rho^3 d\rho = 2\pi G\theta \frac{r^4}{4}$$

$$T = \frac{\pi}{2} G\theta r^4$$

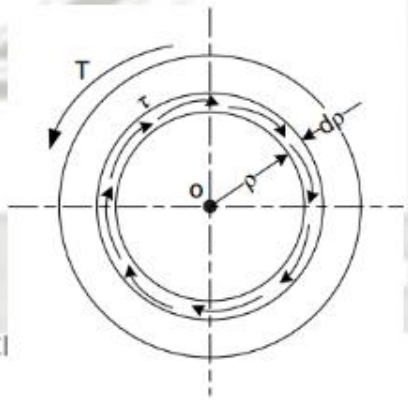

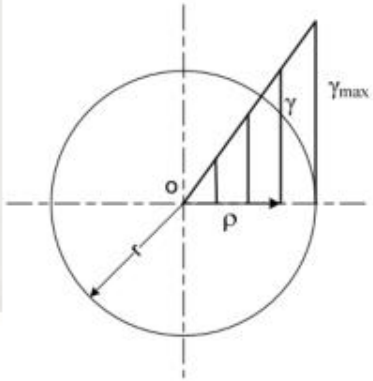

Mechanics of Materials – 2nd Cl

Polar Moment of Inertia

$$J = \int_{area} \rho^2 dA$$

$$J = \int_0^r 2\pi\rho.\rho^2 d\rho$$

$$J = 2\pi \int_0^r \rho^3 d\rho$$

$$J = 2\pi \frac{r^4}{4} = \frac{\pi r^4}{2}$$

$$T = JG\theta$$

$$\theta = \frac{\phi}{L}$$

$$\phi = \theta L = \frac{TL}{GJ}$$

$$\tau_{max} = \frac{Gr\frac{TL}{GJ}}{L} = \frac{Tr}{J}$$

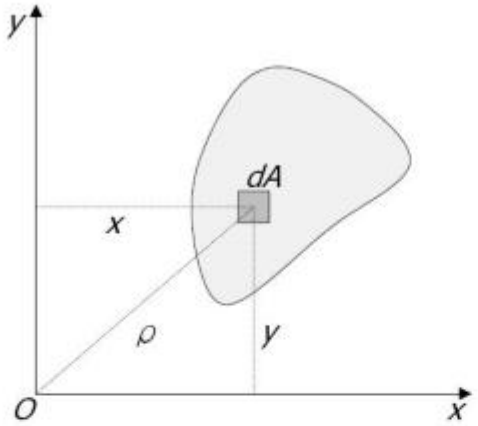

Hollow Circular Sections

$$J = \frac{\pi}{2}(r_1^4 - r_2^4)$$

$$\tau_{max} = \frac{Tr_1}{J}$$

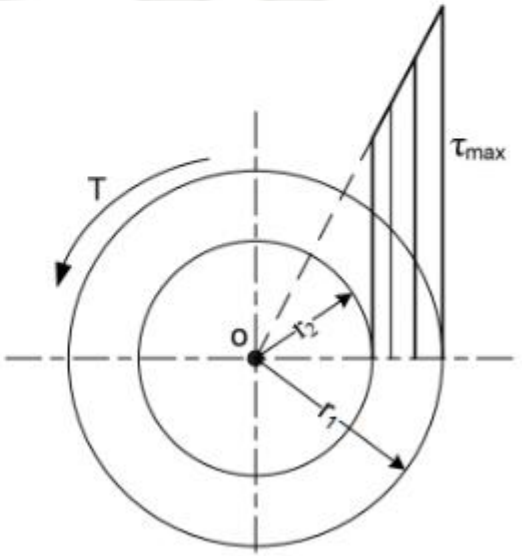

EXAMPLE 4-1

A plastic bar of diameter d=50 mm is to be twisted by torques T as shown in the figure until the angle of rotation between the ends of the bar is 5.0°.If the allowable shear strain in the plastic is 0.012 rad, what is the minimum permissible length of the bar?

$$d = 50mm$$

$$\phi = 5^{\circ} = 5 \times \frac{\pi}{180} = 0.08727rad$$

$$\gamma_{allow.} = 0.012rad$$

$$\gamma_{\max} = \frac{r\phi}{L} = \frac{d \times \phi}{2L}$$

$$L_{\min} = \frac{d \times \phi}{2\gamma_{allow}} = \frac{50 \times 0.08727}{2 \times 0.012} = 182mm$$

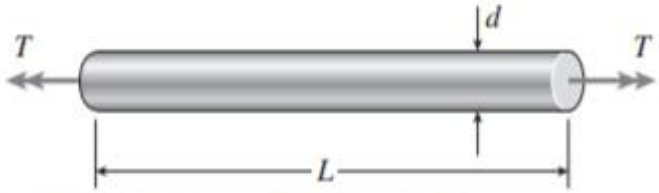

EXAMPLE 4-2

Determine the maximum shearing stress occurs in the circular shaft AC.

$$J = \frac{\pi \times r^4}{2} = \frac{\pi \times 5^4}{2} = 981.7mm^4$$

$$\tau_{\max} = \frac{Tr}{J} = \frac{30 \times 10^3 \times 5}{981.7} = 152.8MPa$$

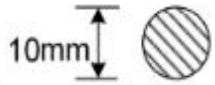

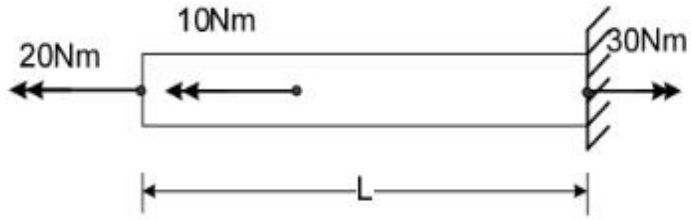

EXAMPLE 4-3

A circular hollow shaft with an outside diameter of 20mm and inside diameter of 16mm is subjected to a torque of 40Nm. Determine the torsional shear stress at the outside surface and inside surface of the shaft.

$$J = \frac{\pi}{2}(r_1^4 - r_2^4) = \frac{\pi}{2}(10^4 - 8^4) = 9274mm^4$$

$$\tau_{\max} = \tau_{out} = \frac{Tr_1}{J} = \frac{40\times10^3\times10}{9274} = 43.13MPa$$

$$\tau_{\min} = \tau_{in} = \frac{Tr_2}{J} = \frac{40\times10^3\times8}{9274} = 34.51MPa$$

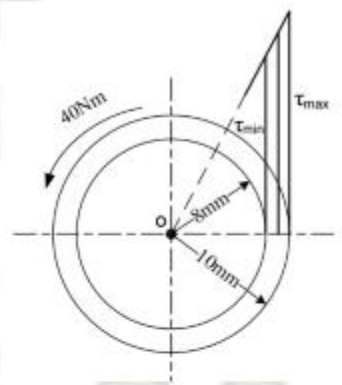

EXAMPLE 4-4

The pipe shown in the figure has an inner radius of 40 mm and an outer radius of 50 mm. If its end is tightened against the support at *A* using the torque wrench, determine the shear stress developed in the material at the inner and outer walls along the central portion of the pipe.

$$\sum M_x = 0$$

$$80\times0.3 + 80\times0.2 - T = 0$$

$$T = 40N.m$$

$$J = \frac{\pi}{2}(r_1^4 - r_2^4) = \frac{\pi}{2}(50^4 - 40^4) = 5796238mm^4$$

$$\tau_{out} = \frac{Tr_1}{J} = \frac{40\times10^3\times50}{5796238} = 0.345MPa$$

$$\tau_{out} = \frac{Tr_1}{J} = \frac{40\times10^3\times40}{5796238} = 0.276MPa$$

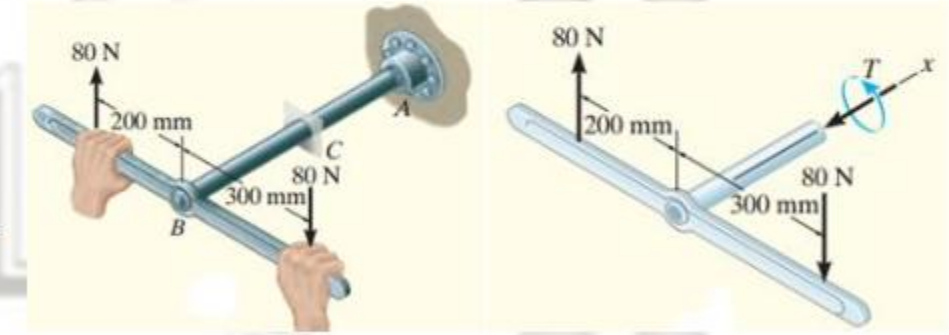

EXAMPLE 4-5

The steel shaft shown below is subjected to two concentrated torques at B and C. If the shear modulus of the steel material G is 80GPa, determine:

1. The angle of twist at the free end (total angle of twist).
2. The maximum shear strain in the shaft.

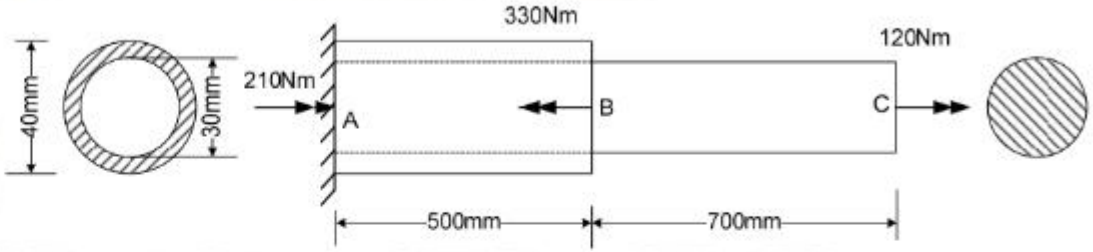

$$J_{AB} = \frac{\pi}{2}(r_1^4 - r_2^4) = \frac{\pi}{2}(20^4 - 15^4) = 171806mm^4$$

$$J_{BC} = \frac{\pi}{2}r^4 = \frac{\pi}{2}\times 15^4 = 79521.5mm^4$$

$$\phi_c = \phi_{AB} + \phi_{BC} = (\frac{TL}{GJ})_{AB} + (\frac{TL}{GJ})_{BC}$$

$$\phi_C = -\frac{210\times10^3\times500}{80\times10^3\times171806} + \frac{120\times10^3\times700}{80\times10^3\times79521.5} = 0.00556rad.$$

$$\tau_{\max} = (\frac{Tr}{J})_{AB} = \frac{210\times10^3\times20}{171806} = 24.45MPa$$

Check the shear stress at BC:

$$\tau_{\max} = (\frac{Tr}{J})_{BC} = \frac{120\times10^3\times15}{79521.5} = 22.64MPa$$

$$\gamma_{\max} = \frac{\tau_{\max}}{G} = \frac{24.45}{80000} = 0.0003rad.$$

EXAMPLE 4-6

The two solid steel shafts shown in figure are coupled together using the meshed gears. Determine the angle of twist of end A of shaft AB when the torque T = 45 N.m is applied. Shaft DC is fixed at D. Each shaft has a diameter of 20 mm and G = 80 GPa.

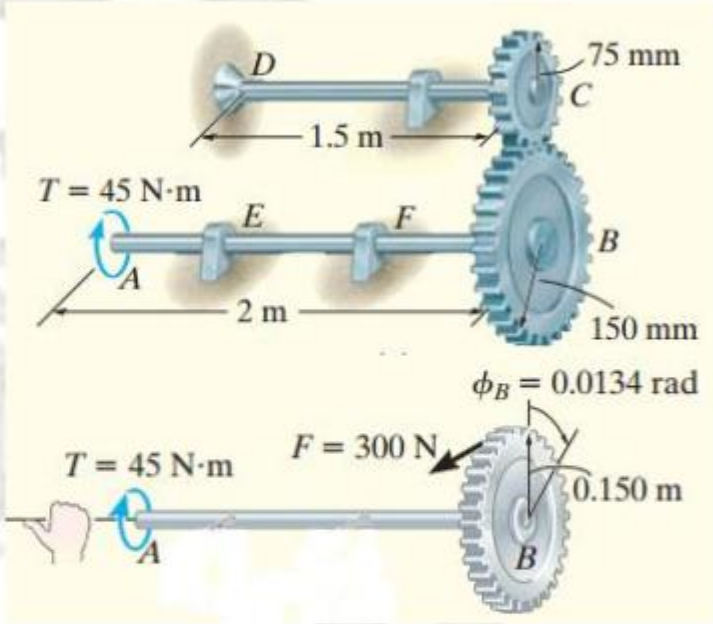

Summing moments along the axis of shaft AB yields the tangential reaction between the gears:

$$F = \frac{T_A}{L} = \frac{45}{0.15} = 300N$$

$$T_D = 300 \times 0.075 = 22.5N.m$$

$$J = \frac{\pi}{2} \times 10^4 = 15708mm^4$$

$$\phi_c = (\frac{TL}{GJ})_{DC} = \frac{22.5 \times 10^3 \times 1500}{80 \times 10^3 \times 15708} = 0.0269rad.$$

$$\therefore \phi_B \times 0.15 = 0.0269 \times 0.075\phi_{AB}$$

$$\phi_B = 0.0134rad.$$

$$\phi_{AB} = (\frac{TL}{GJ})_{AB} = \frac{45 \times 10^3 \times 2000}{80 \times 10^3 \times 15708} = 0.0716rad.$$

$$\therefore \phi_A = \phi_B + \phi_{AB}. = 0.0134 + 0.0716 = 0.085rad$$

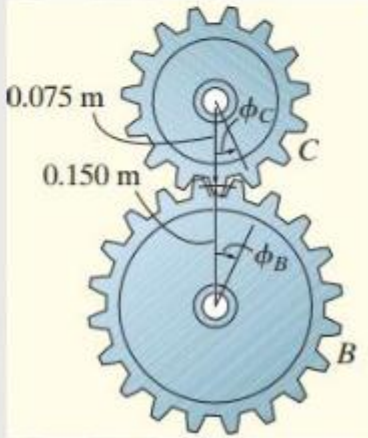

EXAMPLE 4-7

If the 40-mm-diameter rod is subjected to a uniform distributed torque of t_o =1.5 kN.m/m, determine the shear stress developed at point *C*.

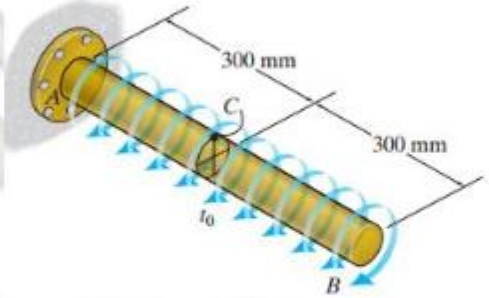

$$J = \frac{\pi}{2} r^4 = \frac{\pi}{2} \times 20^4 = 251327.4 mm^4$$

$$\tau_{\max} = \frac{Tr}{J} = \frac{1.5 \times 0.3 \times 10^6 \times 20}{251327.4} = 35.8 MPa$$

EXAMPLE 4-8

If the rod in Ex. 4-7 is subjected to a uniform distributed torque of t_o =1.5 kN.m/m, determine the rod's minimum required diameter d if the material has an allowable shear stress of τallow = 75 MPa.

$$\tau_{allow} = \frac{T_{\max} r}{J} \Rightarrow J = \frac{T_{\max} r}{\tau_{allow}}$$

$$J = \frac{1.5 \times 0.6 \times 10^6 \times r}{75} = 12000r$$

$$J = \frac{\pi}{2} r^4 \Rightarrow 12000r = \frac{\pi}{2} r^4$$

$$r^3 = 7639.43 \Rightarrow r = 19.694 mm$$

$$\therefore d = 39.4 mm$$

EXAMPLE 4-9

If the 40-mm-diameter rod is made from a material having an allowable shear stress of τallow = 75 MPa, determine the maximum allowable intensity of the uniform distributed torque.

$$J = \frac{\pi}{2} r^4 = \frac{\pi}{2} 20^4 = 251327.4$$

$$\tau_{allow} = \frac{T_{\max} r}{J} \Rightarrow T_{\max} = \frac{\tau_{allow} \times J}{r} = \frac{\pi}{2} r^3 \tau_{allow}$$

$$T_{\max} = \frac{\pi}{2} \times 20^3 \times 75 \times 10^{-6} = 0.942 kN.m$$

$$t_o = \frac{0.942}{0.6} = 1.57 kN.m/m$$

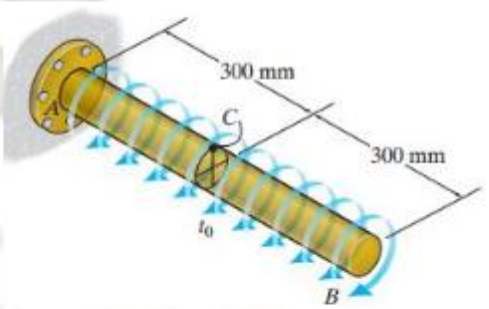

EXAMPLE 4-10

An aluminum shaft with a constant diameter of 50 mm is loaded by torques applied to gears attached to it as shown in figure. Using G = 28 GPa, determine the relative angle of twist of gear D relative to gear A.

$$J = \frac{\pi}{2} r^4 = \frac{\pi}{2} 25^4 = 613592.3 mm^4$$

$$\phi = \sum \frac{TL}{GJ}$$

$$\phi = \frac{(800 \times 2000 - 300 \times 3000 + 600 \times 2000) \times 10^3}{613592.3 \times 28000}$$

$$\phi = 0.1106$$

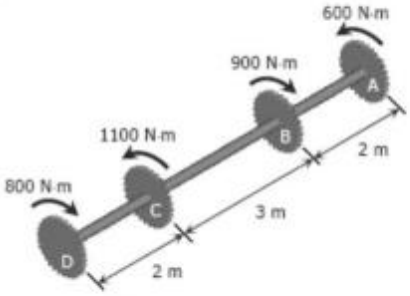

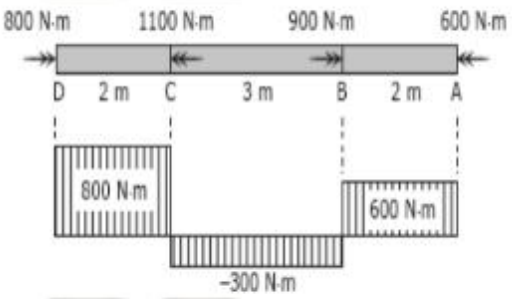

EXAMPLE 4-11

A compound shaft consisting of a steel segment and an aluminum segment is acted upon by two torques as shown in the figure. Determine the maximum permissible value of T subject to the following conditions: τ_{st}= 83 MPa, τ_{al}= 55 MPa, and the angle of rotation of the free end is limited to 6°. For steel, G = 83 GPa and for aluminum, G = 28 GPa.

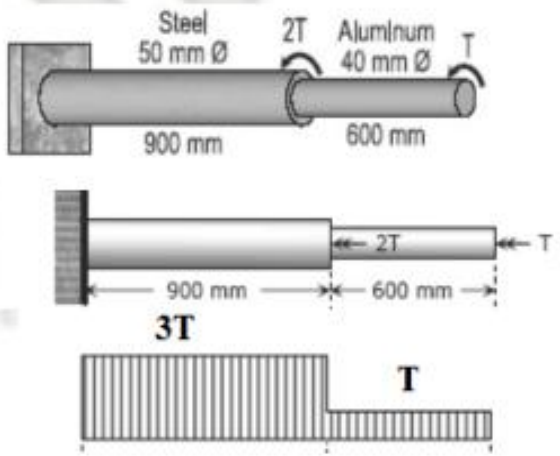

Based on the maximum shearing stress:

$$\tau_{st} = \frac{T_{\max} r}{J} = \frac{2T_{\max}}{\pi \times r^3}$$

$$83 = \frac{2 \times 3T}{\pi \times 25^3}$$

$$T = 679042.16 N.mm \Rightarrow 679.04 N.m$$

$$\tau_{al} = \frac{Tr}{J} = \frac{2T}{\pi \times r^3}$$

$$55 = \frac{2 \times T}{\pi \times 20^3}$$

$$T = 691150.38 N.mm \Rightarrow 691.15 N.m$$

Based on the maximum angle of twist:

$$\phi = \phi_{st} + \phi_{al} = (\frac{TL}{GJ})_{st} + (\frac{TL}{GJ})_{al}$$

$$6 \times \frac{\pi}{180} = \frac{3T \times 900}{\frac{\pi}{2} \times 25^4 \times 83000} + \frac{T \times 600}{\frac{\pi}{2} \times 20^4 \times 28000}$$

$$T = 757316.32 N.mm = 757.32 N.m$$

$$\therefore T = 679.04 N.m$$

EXAMPLE 4-12

A solid steel shaft is loaded as shown in figure. Using G = 83 GPa, determine the required diameter of the shaft if the shearing stress is limited to 60 MPa and the angle of rotation at the free end is not to exceed 4 deg.

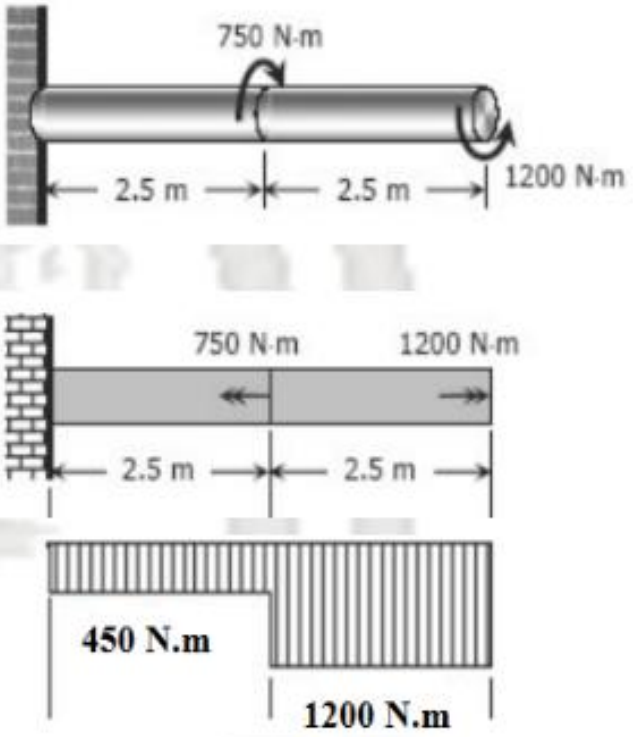

Based on the maximum allowable shearing stress:

$$\tau_{max} = \frac{T_{max} r}{J} = \frac{2T_{max}}{\pi \times r^3}$$

$$60 = \frac{2 \times 450 \times 10^3}{\pi \times r^3}$$

$$r = 16.838mm \Rightarrow D = 33.677mm$$

$$60 = \frac{2 \times 1200 \times 10^3}{\pi \times r^3}$$

$$r = 23.35mm \Rightarrow D = 46.7mm$$

Based on the maximum angle of twist:

$$\phi = \sum \frac{TL}{GJ}$$

$$4 \times \frac{\pi}{180} = \frac{(450 + 1200) \times 10^3 \times 2500}{\frac{\pi}{2} \times r^4 \times 83000}$$

$$r = 25.94mm \Rightarrow D = 51.89mm$$

$$\therefore D = 51.89mm$$

EXAMPLE 4-13

The rod has a diameter of 25mm and a weight of 15 N/m. Determine the maximum torsional stress in the rod at a section located at B due to the rod's weight

$$\sum M_x = 0$$

$$T_B = 15 \times 1.2 \times 0.6 = 10.8 N.m$$

$$J = \frac{\pi}{2} r^4 = \frac{\pi}{2} 12.5^4 = 38.35 mm^4$$

$$\tau_{max} = \frac{Tr}{J} = \frac{10.8 \times 10^3 \times 12.5}{38.35} = 3.52 MPa$$

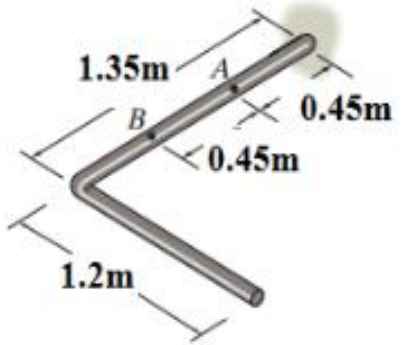

Statically Indeterminate Problems

Equilibrium Equation: $T_1 + T_2 = T \rightarrow (1)$ **Compatibility Equation:** $\phi_1 = \phi_2 \rightarrow (2)$

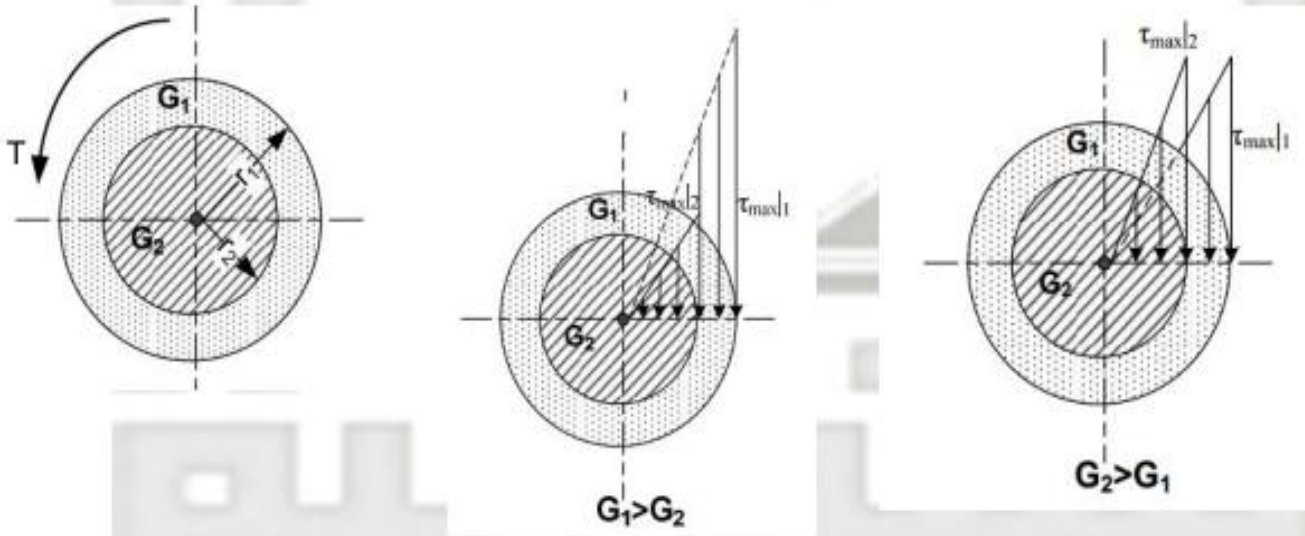

EXAMPLE 4-14

The shaft shown in figure is made from a steel tube, which is bonded to a brass core. If a torque of T = 340 N.m is applied at its end, plot the shear-stress distribution along a radial line on its cross section. Take Gst = 78600 MPa and Gbr =35850.



$$T_{st} + T_{br} = 340 \rightarrow (1)$$

$$\phi = \phi_{st} = \phi_{br} \Rightarrow \left(\frac{TL}{GJ}\right)_{st} = \left(\frac{TL}{GJ}\right)_{br}$$

$$\frac{T_{st} \times L}{\frac{\pi}{2} \times (26^4 - 13^4) \times 78600} = \frac{T_{br} \times L}{\frac{\pi}{2} \times 13^4 \times 35850}$$

$$T_{st} = \frac{T_{br} \times (26^4 - 13^4) \times 78600}{13^4 \times 35850} \Rightarrow T_{st} = 32.887 T_{br} \rightarrow (2)$$

$$\therefore T_{br} = 10.033 N.m$$

$$T_{st} = 329.966 N.m$$

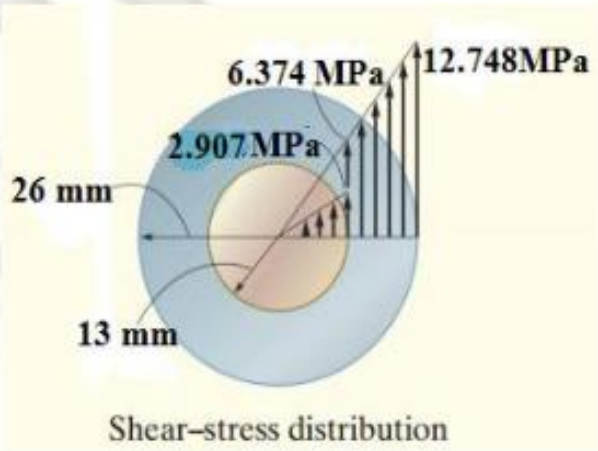

Shear–stress distribution

$$\gamma_{br} = (\gamma_{st})_{\min}$$

$$(\tau \times G)_{br} = (\tau_{in} \times G)_{st}$$

$$(\tau_{br})_{\max} = \frac{T_{br} r}{J} = \frac{2T_{\max}}{\pi \times r^3} = \frac{2 \times 10.033 \times 10^3}{\pi \times 13^3} = 2.907 MPa$$

$$(\tau_{st})_{\max} = \frac{T_{st} r_2}{J} = \frac{T_{st} r_2}{\frac{\pi}{2}(r_2^4 - r_1^4)} = \frac{329.966 \times 10^3 \times 26}{\frac{\pi}{2}(26^4 - 13^4)} = 12.748 MPa$$

$$(\tau_{st})_{\min} = \frac{T_{st} r_1}{J} = \frac{T_{st} r_1}{\frac{\pi}{2}(r_2^4 - r_1^4)} = \frac{329.966 \times 10^3 \times 13}{\frac{\pi}{2}(26^4 - 13^4)} = 6.374 MPa$$

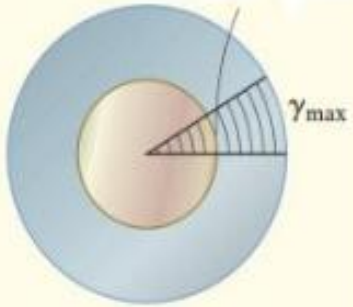

Shear–strain distribution

EXAMPLE 4-15

A shaft composed of segments AC, CD, and DB is fastened to rigid supports and loaded as shown in figure. For bronze, G = 35 GPa; aluminum, G = 28 GPa, and for steel, G = 83 GPa. Determine the maximum shearing stress developed in each segment.

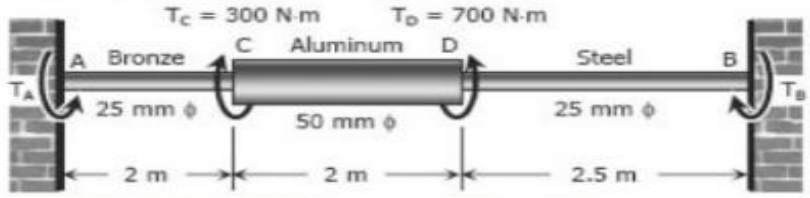

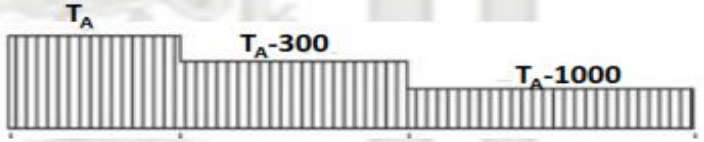

$$\phi_{A/B} = 0$$

$$\sum \left(\frac{TL}{GJ}\right)_{A/B} = 0$$

$$\frac{T_A \times 10^3 \times 2000}{\frac{\pi}{2} 12.5^4 \times 35000} + \frac{(T_A - 300) \times 10^3 \times 2000}{\frac{\pi}{2} 25^4 \times 28000} + \frac{(T_A - 1000) \times 10^3 \times 2500}{\frac{\pi}{2} 12.5^4 \times 83000} = 0$$

$$\frac{2T_A}{12.5^4 \times 35} + \frac{2(T_A - 300)}{25^4 \times 28} + \frac{2.5(T_A - 1000)}{12.5^4 \times 83} = 0$$

$$\frac{16T_A}{35} + \frac{(T_A - 300)}{28} + \frac{20(T_A - 1000)}{83} = 0$$

$$\frac{16}{35} T_A + \frac{1}{28} T_A - \frac{25}{7} + \frac{20}{83} T_A - \frac{20000}{83} = 0$$

$$T_A = 342.97 N.m$$

$$\sum M_x = 0$$

$$T_A + T_B = 300 + 700$$

$$342.97 + T_B = 1000 \rightarrow T_B = 657.03 N.m$$

$$T_{br} = 342.97 N.m, T_{al} = 342.97 - 300 = 42.97 N.m, T_{st} = 342.97 - 1000 = -657.03 N.m$$

$$\tau_{\max} = \frac{Tr}{J} = \frac{2T}{\pi \times r^3}$$

$$\tau_{br} = \frac{2 \times 342.97 \times 10^3}{\pi \times 12.5^3} = 111.79 MPa$$

$$\tau_{al} = \frac{2 \times 42.97 \times 10^3}{\pi \times 25^3} = 1.75 MPa$$

$$\tau_{st} = \frac{2 \times 657.03 \times 10^3}{\pi \times 12.5^3} = 214.16 MPa$$

H.W: A stepped solid circular steel shaft has the shape shown in the figure below and is having G=80*103MPa. The region AC is having D=75mm region CD having D=50mm, and region BD having D=25mm. Determine the maximum shearing stress occurs in the shaft as well as the angle of twist at C where a torsional load of 100N m is applied. Ends A and B are rigidly clamped.

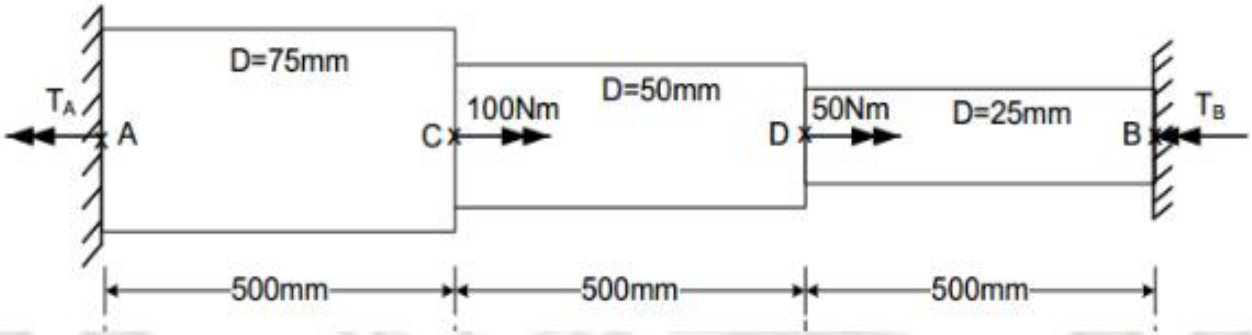

H.W: The shaft is made of L2 tool steel, has a diameter of 40 mm, and is fixed at its ends A and B. If it is subjected to the torque, determine the maximum shear stress in regions AC and CB.

