Ashur University College

Civil Engineering Department

STRENGTH OF MATERIALS

Second Class

2018 – 2019

First Semester

CH. 4 : *AXIAL FORCE, SHEAR AND BENDING MOMENT*

Introduction:

Structural members are usually classified according to the types of loads that they support. For instance, an axially loaded bar supports forces along the axis of the bar, and a bar in torsion supports torques along the axis. Members that are slender and support loadings that are applied perpendicular to their longitudinal axis are called **beams.**

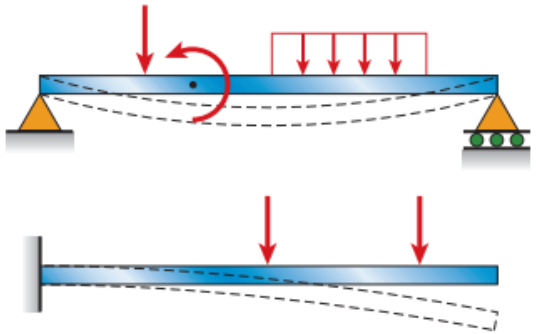

Types of Beams, Load, and Reactions:

Beams are usually described by the manner in which they are supported.

1- Simply supported beam:

A beam with a pin support at one end and a roller support at the other called a **simply supported beam** or a **simple beam**. The essential feature of a **pin support** is that it prevents translation at the end of a beam but does not prevent rotation. Thus, end A of the beam cannot move horizontally or vertically but the axis of the beam can rotate in the plane of the figure. Consequently, a pin support is capable of developing a force reaction with both horizontal and vertical components (HA and RA), but it cannot develop a moment reaction. At end B of the beam, the **roller support** prevents translation in the vertical direction but not in the horizontal direction; hence this support can resist a vertical force (RB) but not a horizontal force. The axis of the beam is free to rotate at B just as it is at A.

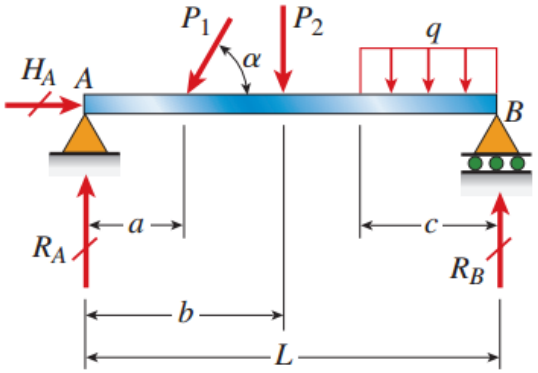

2- Cantilever beam :

The beam is fixed at one end and free at the other, is called a **cantilever beam**. At the **fixed support** (or clamped support) the beam can neither translate nor rotate, whereas at the free end it may do both. Consequently, both force and moment reactions may exist at the fixed support.

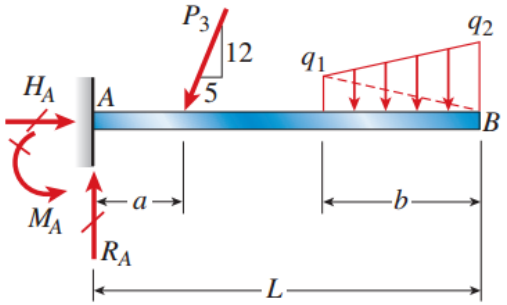

3- Over hanged beam:

This beam is simply supported at points A and B but it also projects beyond the support at B. The overhanging segment BC is similar to a cantilever beam except that the beam axis may rotate at point B.

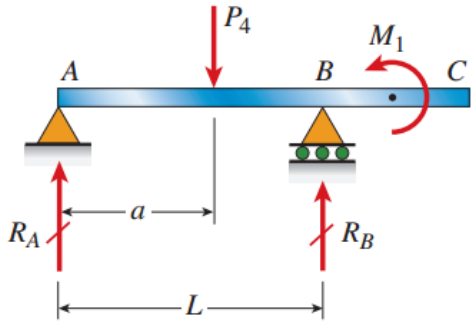

4- Fixed ended beam (clamped beam)

The beam is a statically indeterminate beam

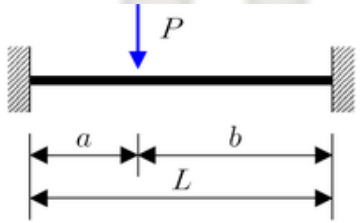

5- Continuous beam

The beam is a statically indeterminate beam

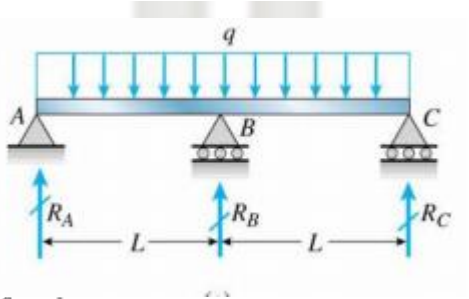

Types of Loads:

1- Concentrated load:

When a load is applied over a very small area it may be idealized as a **concentrated load**, which is a single force. Also a concentrated moment M1 acting on the overhanging beam as a single moment.

2- Distributed load:

When a load is spread along the axis of a beam, it is represented as a **distributed load**, such as the load q.

3- Linearly Varying Load:

A varying load has an intensity that changes with distance along the axis.

4- Couple:

The couple of moment M1 acting on the overhanging beam.

Internal Forces: There are three types of internal forces in the plane as follows:

- **Axial force (P)**, which algebraically equals the summation of all the axial forces exist on one side of the section.
- **Shear force (V)**, which equals the algebraic summation of all the forces that exist perpendicularly on one side of the section.
- **Bending moment (M)**, which equals the algebraic summation of the moments caused by all the perpendicular forces affect one side of the section.

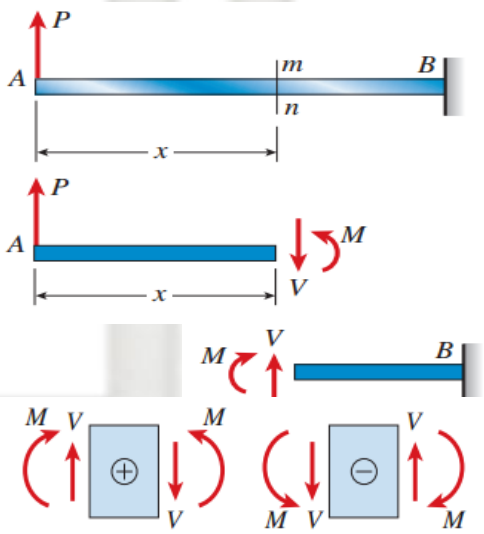

Sign convention:

Axial force (P)

Tensile **(+)**

Compressive **(-)**

Shear force (V)

At the right-hand side of the segment, downward **(+)**

At the right-hand side of the segment, upward **(-)**

Bending moment (M)

If the moment causes concave, that moment should be considered **(+)**

If the moment causes convex, that moment should be considered **(-)**

EXAMPLE 3-1

Determine the shear force V and bending moment M at the midpoint C of the simple beam AB shown in the figure.

$$\sum M_A = 0$$

$$4R_B = 2\times2\times3+6\times1$$

$$R_B = 4.5kN$$

$$\sum M_B = 0$$

$$4R_A = 2\times2\times1+6\times3$$

$$R_A = 5.5kN$$

$$+\uparrow \sum F_y = 0$$

$$V+6 = 5.5 \rightarrow V = -0.5kN$$

$$\sum M_C = 0$$

$$6\times1+M = 5.5\times2 \rightarrow M = 5kN.m$$

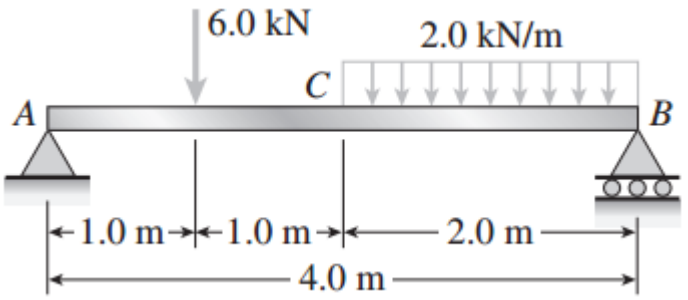

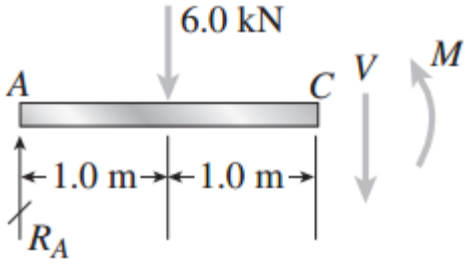

EXAMPLE 3-2

Calculate the shear force V and bending moment M at a cross section located 0.5 m from the fixed support of the cantilever beam AB shown in the figure.

$$+\uparrow \sum F_y = 0$$

$$V = 4 + 1.5 \times 2 = 7kN$$

$$\sum M_D = 0$$

$$M + 4 \times 0.5 + 1.5 \times 2 \times 2.5 = 0$$

$$M = -9.5kN.m$$

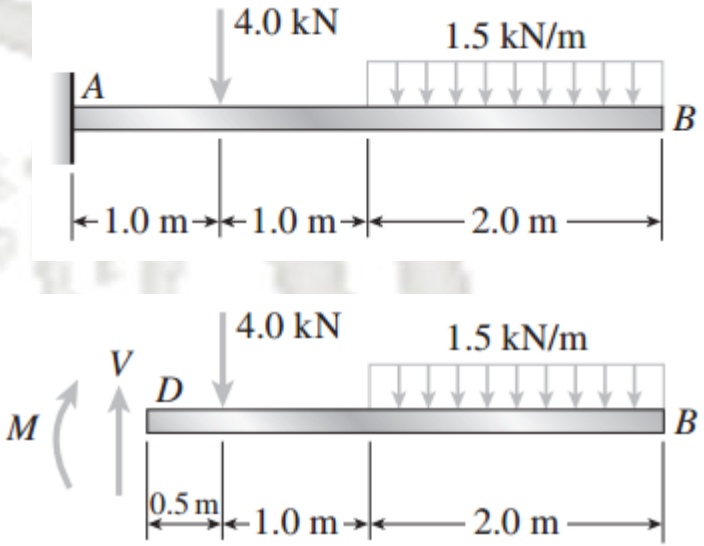

EXAMPLE 3-3

Determine the shear force V and bending moment M at the midpoint of the beam with overhangs. Note that one load acts downward and the other upward.

$$\sum M_B = 0$$

$$R_A \times L = P(L+b) + Pb = PL + 2Pb$$

$$R_A = P(1+\frac{2b}{L}) \uparrow$$

$$\sum M_A = 0$$

$$R_B = P(1+\frac{2b}{L}) \downarrow$$

$$\sum F_y = 0$$

$$V = R_A - P = P(1+\frac{2b}{L}) - P = \frac{2bP}{L}$$

$$\sum M_C = 0$$ **C at mid spam**

$$M = P(1+\frac{2b}{L})(\frac{L}{2}) - P(b+\frac{L}{2})$$

$$M = \frac{PL}{2} + Pb - Pb - \frac{PL}{2} = 0$$

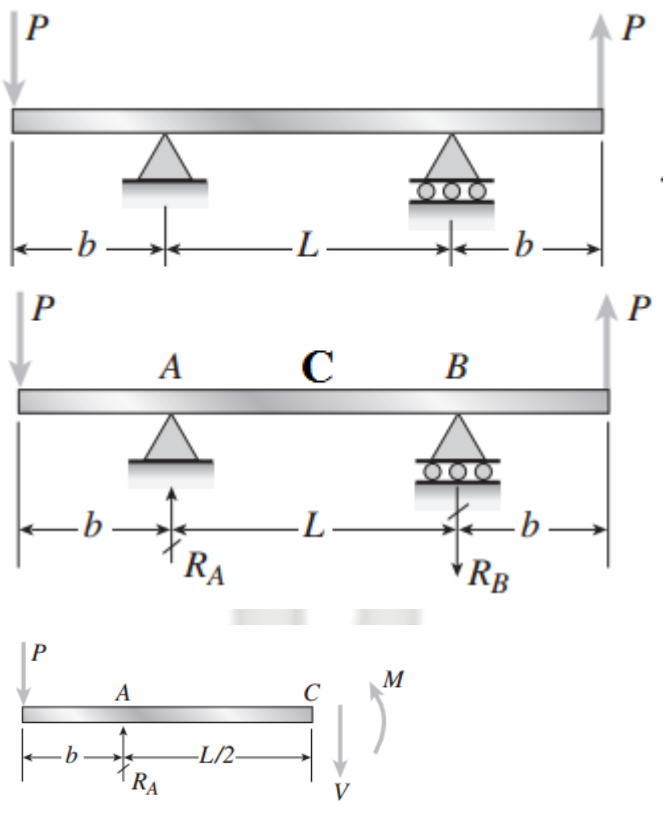

EXAMPLE 3-4

Calculate the reactions on the supports A and B

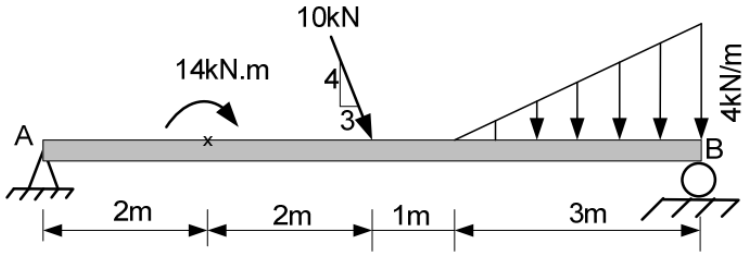

$$\sum F_x = 0$$

$$A_x = 10 \times \frac{3}{5} = 6kN$$

$$\sum M_A = 0$$

$$R_B \times 8 = \frac{1}{2} \times 3 \times 4 \times 7 + 10 \times \frac{4}{5} \times 4 + 14$$

$$R_B = 11kN$$

$$\sum F_y = 0$$

$$A_y + 11 = 8 + 6$$

$$A_y = 3kN$$

EXAMPLE 3-5

Calculate the reactions on the supports A and B

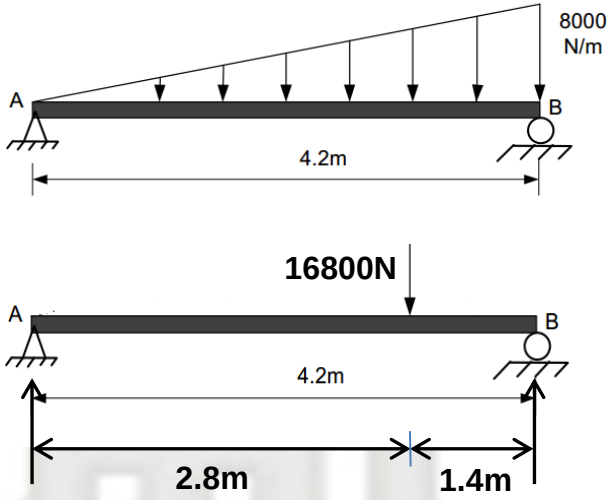

$$R_A = 5600N$$

$$R_B = 11200N$$

EXAMPLE 3-6

Calculate the reactions on the supports A and B

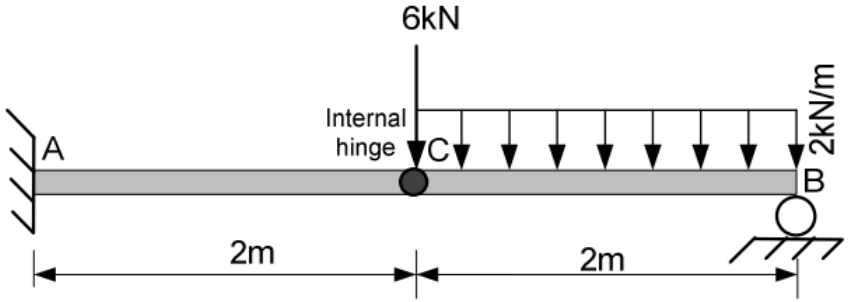

The internal hinge always adds additional equilibrium equation to the three original equilibrium equations that is:

$$\sum M_{hinge} = 0$$

Part BC:

$$\sum M_c = 0$$

$$4 \times 1 = R_B \times 2 \Rightarrow R_B = 2kN$$

$$\sum F_y = 0$$

$$C_y + 2 = 4$$

$$C_y = 2kN$$

Part AC:

$$\sum F_y = 0$$

$$A_y = 6 + 2 = 8kN$$

$$\sum M_A = 0$$

$$M_A = 6 \times 2 + 2 \times 2 = 16kN.m$$

$$\sum F_x = 0$$

$$A_x = 0$$

Shear and Moment Diagrams by Equations:

EXAMPLE 3-7

Draw the shear and moment diagrams for the beam shown in the figure shown.

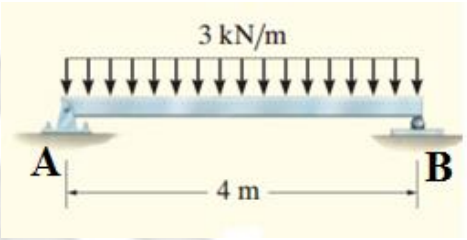

$$R_A = (3\times 4)/2 = 6kN$$

$$+\uparrow \sum F_y = 0$$

$$6 - 3x - V = 0 \rightarrow$$

$$V = 6 - 3x \rightarrow (1)$$

$$\circlearrowleft + \sum M = 0$$

$$-6x + 3x \times \frac{1}{2}x + M = 0$$

$$M = (6x - 1.5x^2) \rightarrow (2)$$

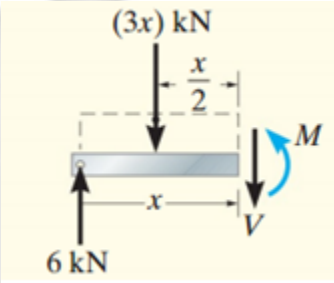

Shear and moments diagrams: The shear and moment diagrams are obtained by plotting Equations 1 and 2. The point of zero shear can be found from Equation 1.

$$V = 6 - 3x = 0$$

$$x = 2$$

From the moment diagram, this value of x represents the point on the beam where the maximum moment occurs. The slope V = dM/dx = 0.

$$M_{\max} = 6\times 2 - 1.5\times 2^2 = 6kN.m$$

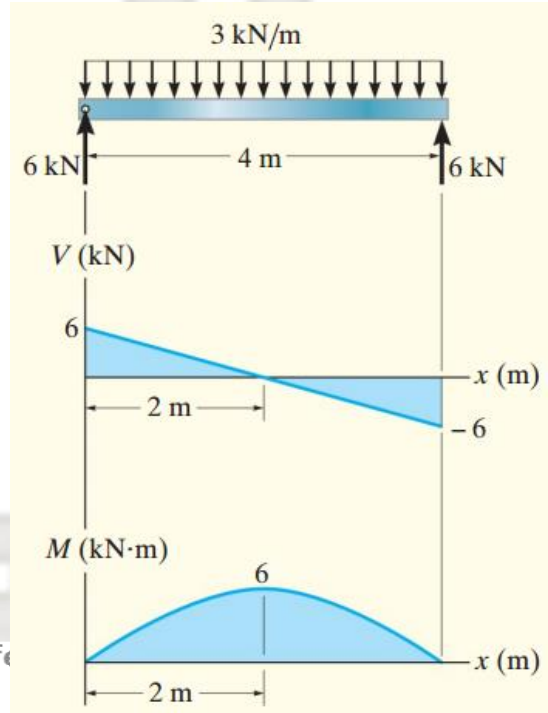

EXAMPLE 3-8

Draw the shear and moment diagrams for the beam shown in the figure shown.

$$+\uparrow \sum F_y = 0$$

$$3 - \frac{1}{2}\left(\frac{2}{3}x\right)x - V = 0$$

$$V = 3 - \frac{1}{3}x^2$$

$$\sum M = 0$$

$$6 - 3x + \frac{1}{2}\left(\frac{2}{3}x\right)x\left(\frac{1}{3}x\right) + M = 0$$

$$M = -6 + 3x - \frac{1}{9}x^3$$

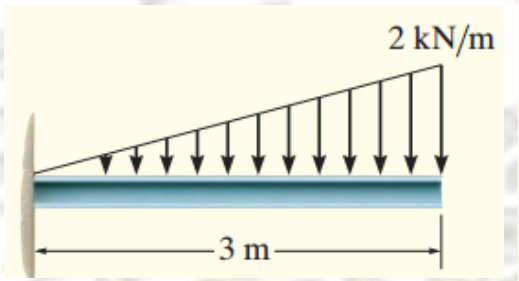

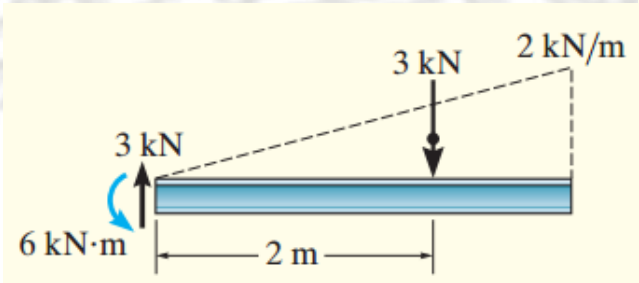

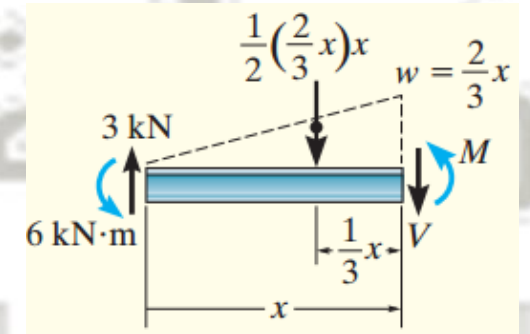

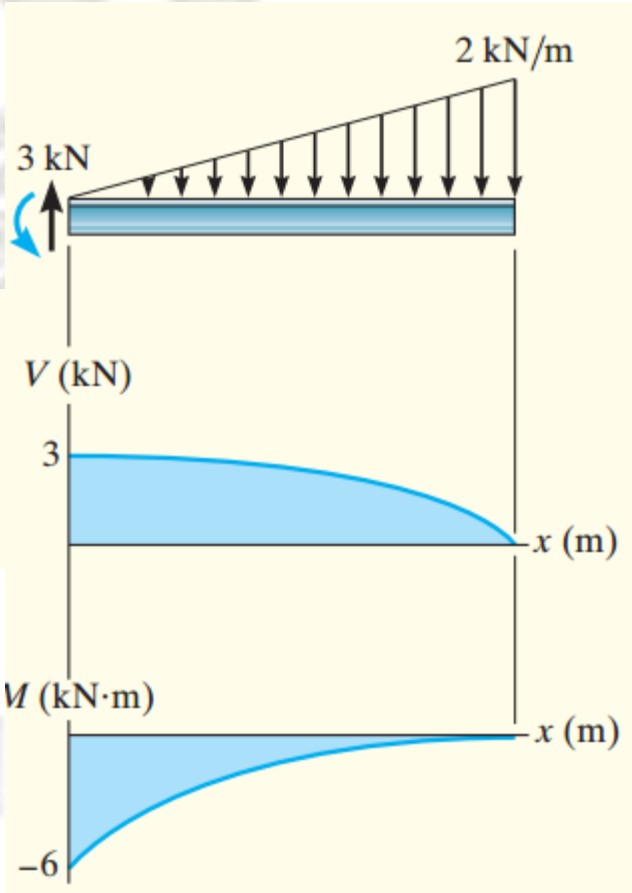

EXAMPLE 3-9

Draw the shear and moment diagrams for the beam shown in the figure shown.

$0 \le x_1 < 5:$

$+\uparrow \sum F_y = 0$

$5.75 - V = 0 \Rightarrow V = 5.75kN$

$\sum M = 0$

$-80 - 5.75x_1 + M = 0$

$M = 5.75x_1 + 80$

$5 < x_2 \le 10:$

$+\uparrow \sum F_y = 0$

$5.75 - 15 - 5(x_2 - 5) - V = 0$

$V = 15.75 - 5x_2$

$\sum M = 0$

$-80 - 5.75x_2 + 15(x_2 - 5) + 5(x_2 - 5)(\frac{x_2 - 5}{2}) + M = 0$

$M = -2.5x_2^2 + 15.75x_2 + 92.5$

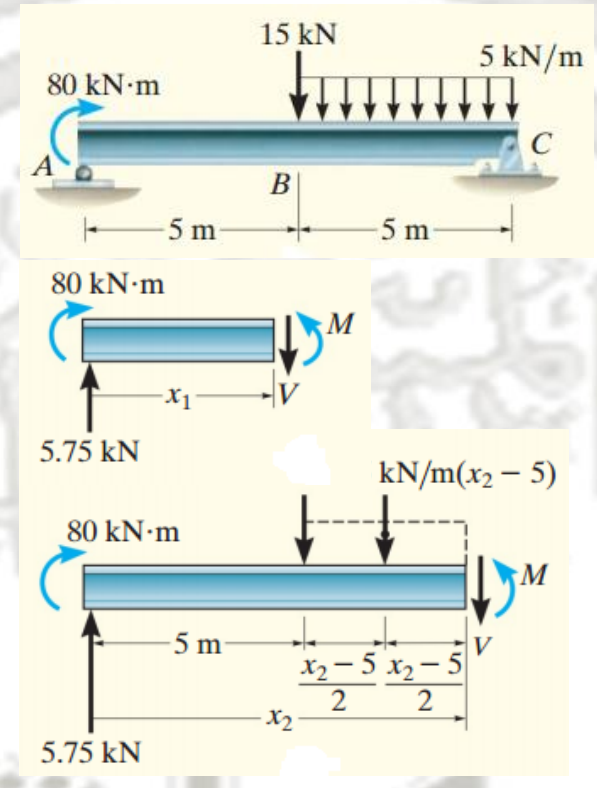

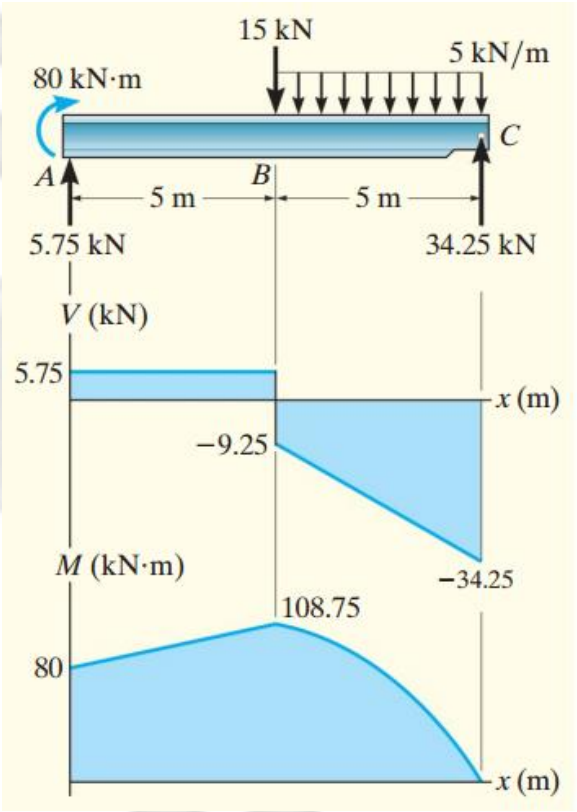

Shear and Moment Diagrams by Graphical Method:

Method based on two differential relations, one that exists between the distributed load and shear, and the other between the shear and moment is a simpler method for constructing the shear and moment diagrams. For region of distributed load:

$$+\uparrow \sum F_y = 0$$

$$V + w\Delta x - (V + \Delta V) = 0$$

$$\Delta V = w\Delta x$$

$$\sum M = 0$$

$$-V\Delta x - M - w\Delta x(\frac{1}{2}\Delta x) + (M + \Delta M) = 0$$

$$\Delta M = V\Delta x + w\frac{1}{2}(\Delta x)^2$$

$$\Delta M = V\Delta x + w\frac{1}{2}(\Delta x)^2$$

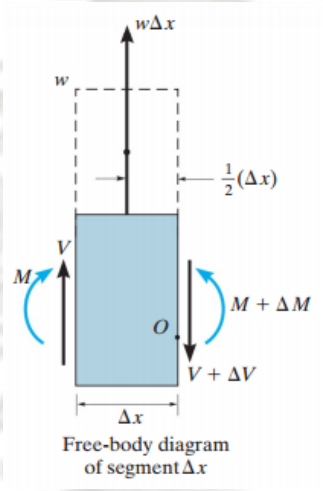

Free-body diagram of segment Δx

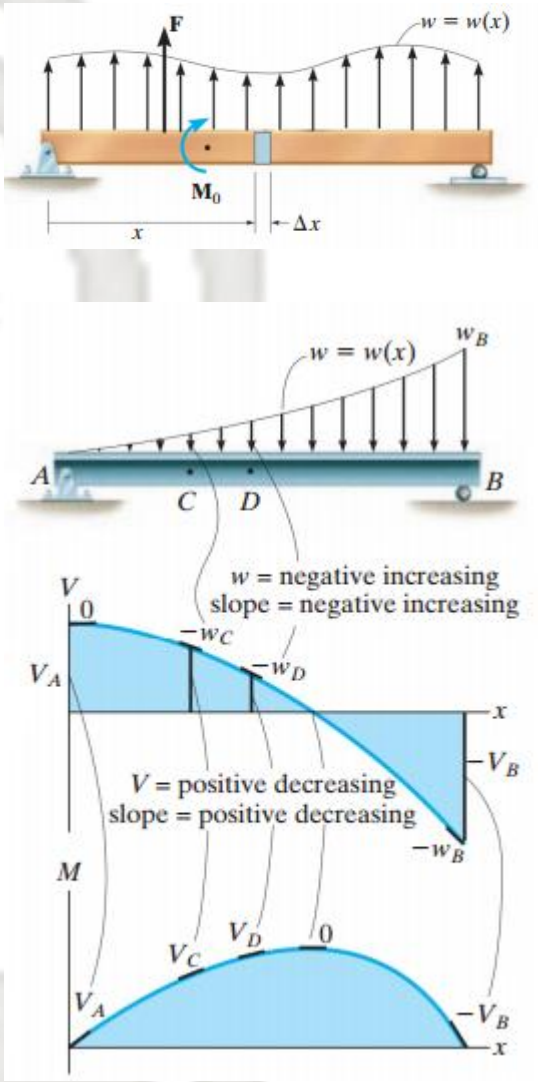

Dividing by x and taking the limit as $\Delta x \to 0$, the above two equations become:

$$\frac{dV}{dx} = w \quad \text{and} \quad \frac{dM}{dx} = V \quad \text{or} \quad \frac{d^2M}{dx^2} = \frac{dV}{dx} = w$$

slope of shear diagram at each point = distributed load intensity at each point

slope of moment diagram at each point = shear at each point

Or : $\Delta V = \int w dx + C_1$ $\quad \Delta M = \int V dx + C_2$

change in shear = area under distributed loading

change in moment = area under shear diagram

EXAMPLE 3-10

Draw the shear and moment diagrams for the beams shown in the figures.

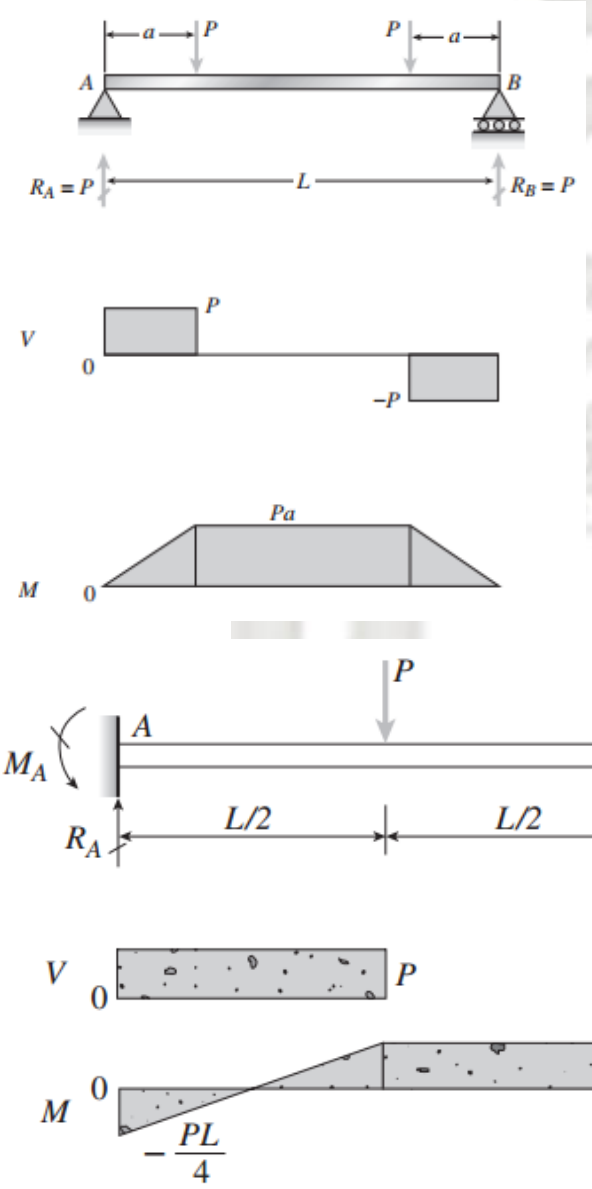

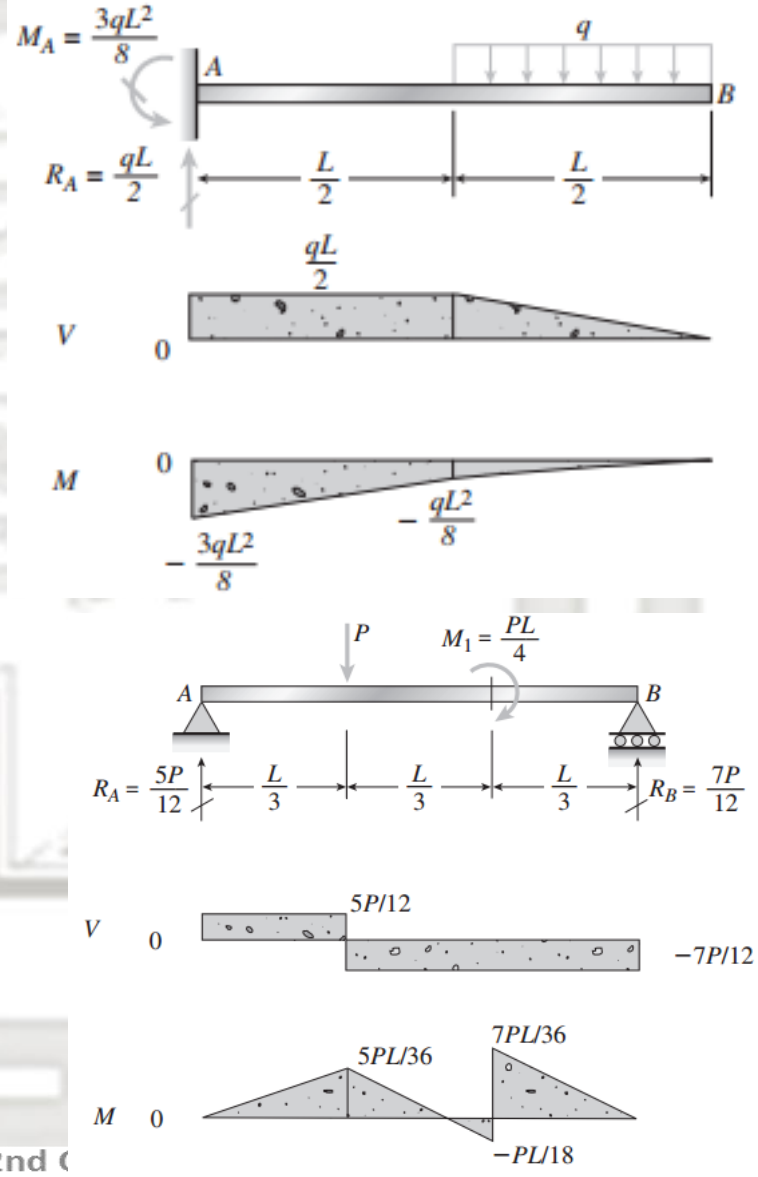

EXAMPLE 3-11

Draw the shear and moment diagrams for the beams shown in the figures and find the position of max. bending moment..

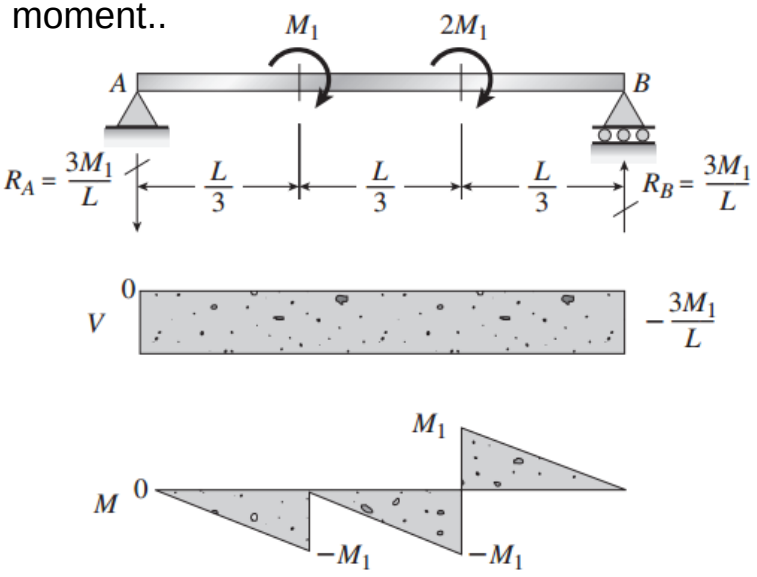

Maximum bending moment occurs when V=0 or in the interior support

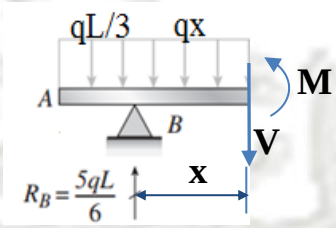

$$\sum Fy = 0$$

$$\frac{qL}{3} + qx + V = \frac{5qL}{6}$$

$$V = 0 \Rightarrow \frac{qL}{2} = qx \Rightarrow x = \frac{L}{2}$$

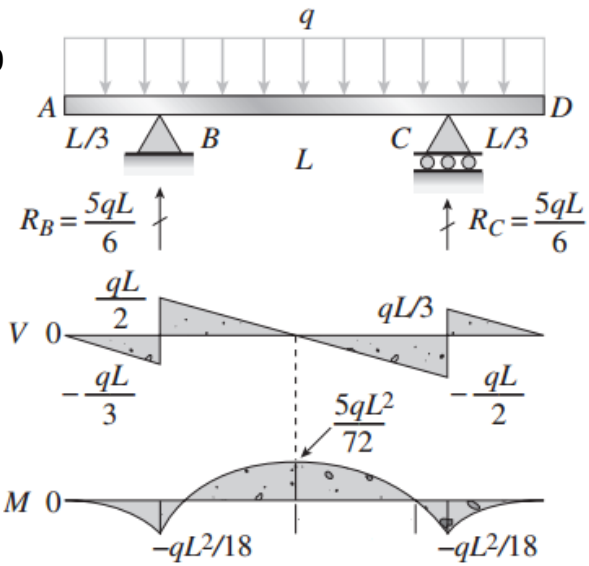

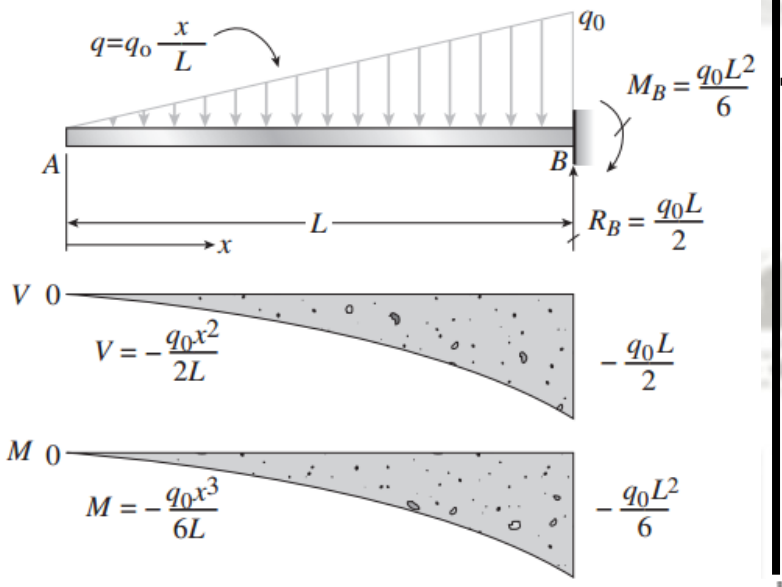

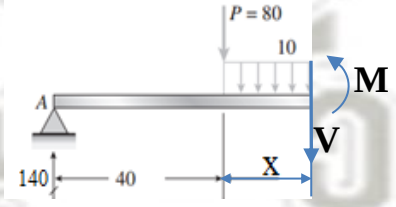

$$\sum Fy = 0$$

$$80 + 10x + V = 140$$

$$x = 6in$$

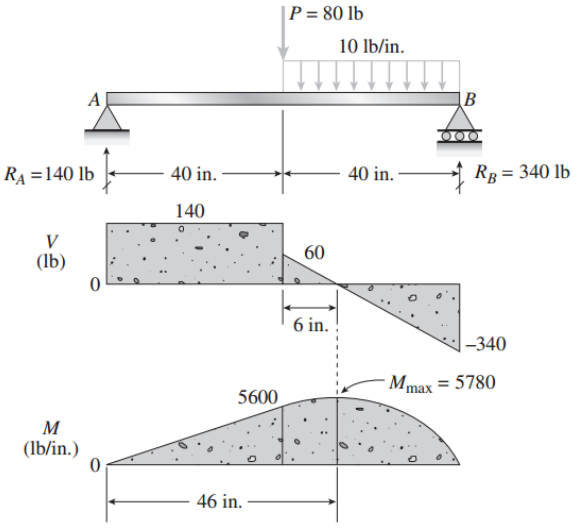

EXAMPLE 3-12

Draw the shear and moment diagrams for the beams shown in the figures and find the position of max. bending moment..

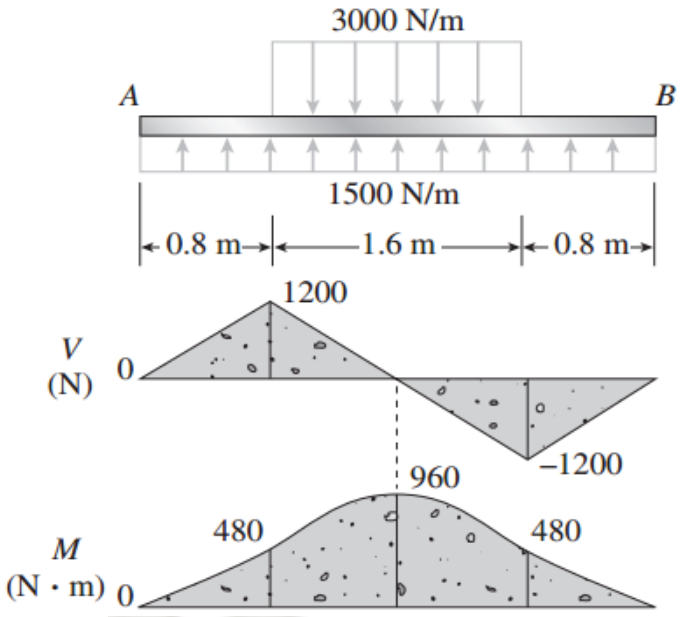

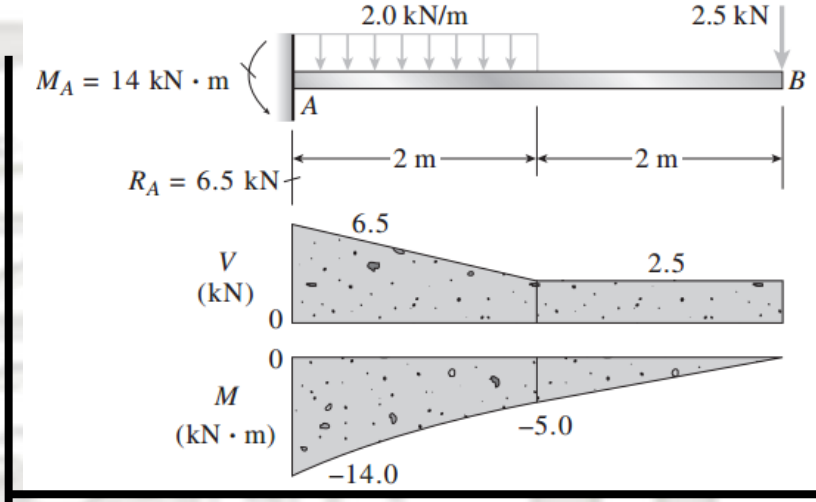

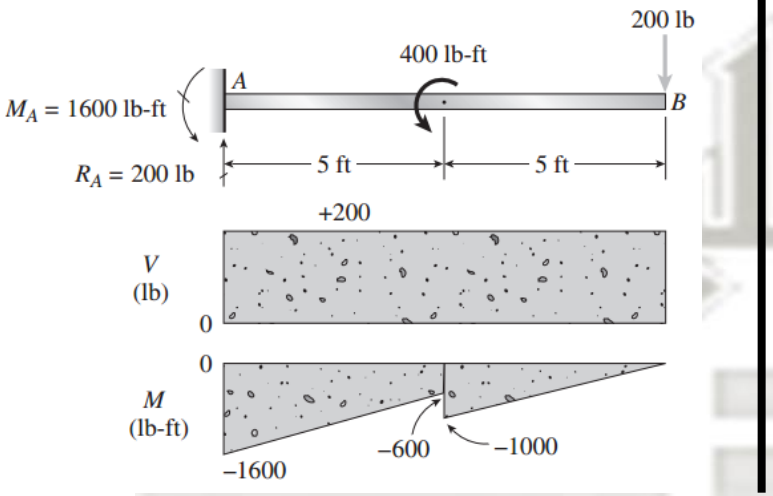

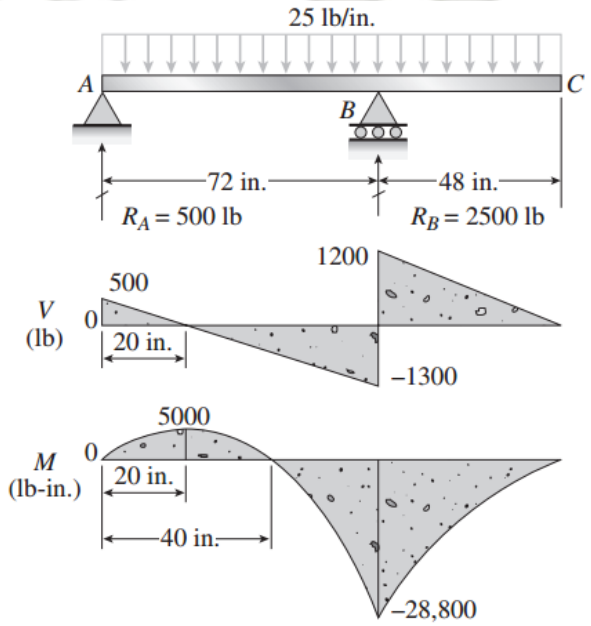

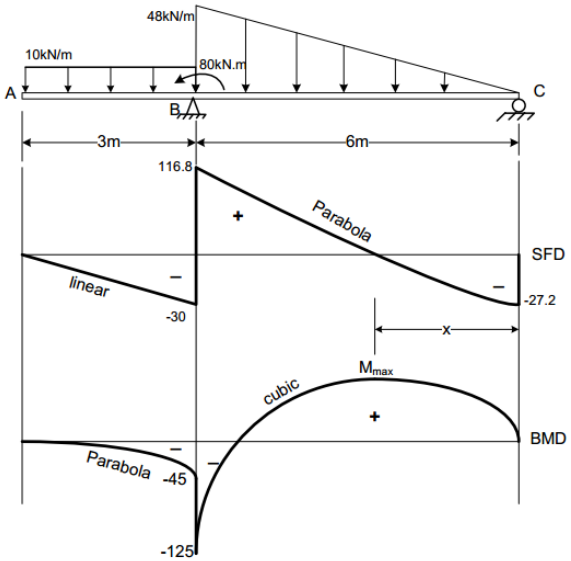
48kN/m
10kN/m
80kN.m
A
B
C
3m
6m
116.8
Parabola
SFD
linear
-30
-27.2
x
M_{max}
cubic
BMD
Parabola
-45
-125

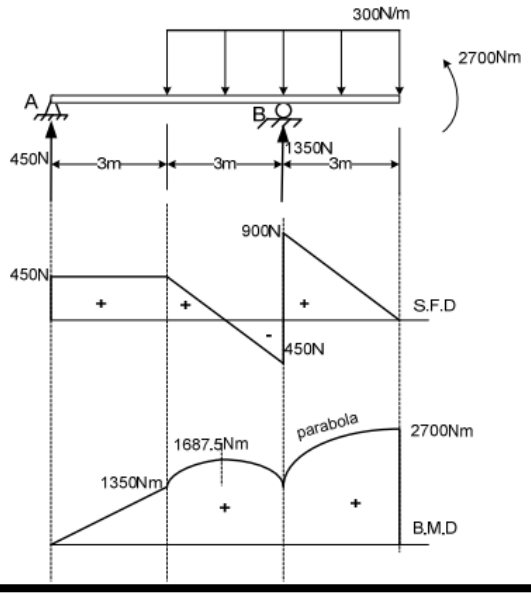
300N/m
2700Nm
A
B
450N
3m
3m
1350N
3m
900N
450N
S.F.D
450N
1687.5Nm
parabola
2700Nm
1350Nm
B.M.D

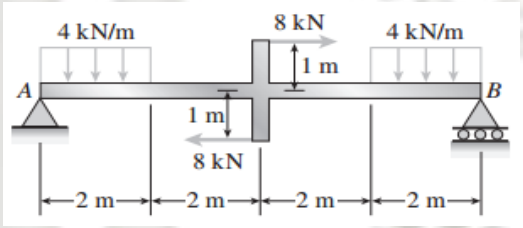
4 kN/m
8 kN
4 kN/m
1 m
A
B
1 m
8 kN
2 m
2 m
2 m
2 m

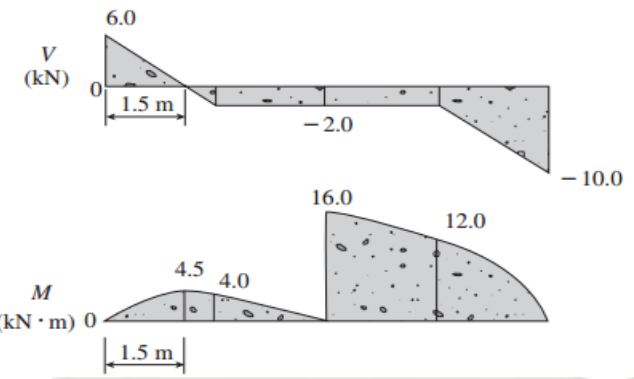
6.0
V
(kN)
0
1.5 m
−2.0
−10.0
16.0
12.0
4.5
4.0
M
(kN · m) 0
1.5 m

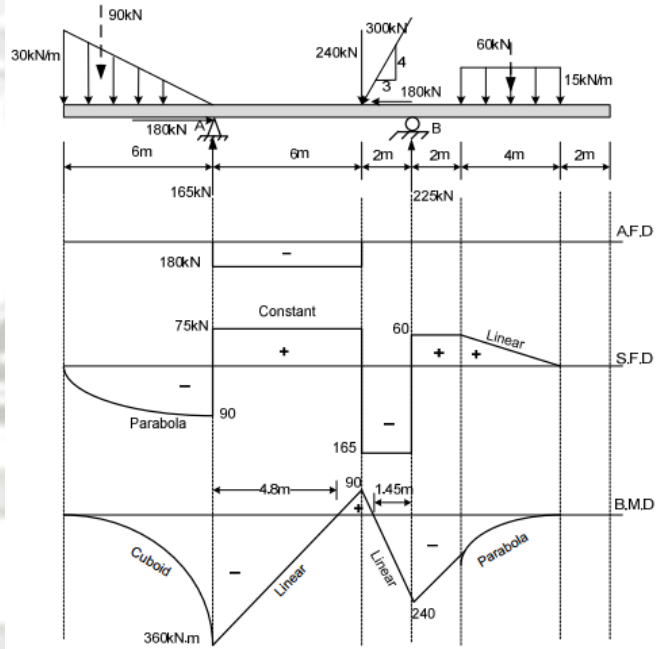
90kN
30kN/m
300kN
240kN
4
3
60kN
15kN/m
180kN
180kN
A
B
6m
6m
2m
2m
4m
2m
165kN
225kN
A.F.D
180kN
Constant
75kN
60
Linear
S.F.D
Parabola
90
165
4.8m
90
1.45m
B.M.D
Cuboid
Linear
Linear
Parabola
360kN.m
240

EXAMPLE 3-13

Draw the shear and moment diagrams for the beam shown in the figure and find the position of max. bending moment..

$$\sum Fy = 0$$

$$6 = 1.5x + \frac{4.5x^2}{8} + V$$

$$V = 0$$

$$6 = 1.5x + \frac{4.5x^2}{8}$$

$$0.563x^2 + 1.5x - 6 = 0$$

$$x = \frac{-1.5 \pm \sqrt{(-1.5)^2 + 4 \times 0.563 \times 6}}{2 \times 0.563}$$

$$x = 2.2m$$

$$\sum M_o = 0$$

$$M + \frac{1.5x^2}{2} + \frac{4.5x}{4} \times \frac{x}{2} \times \frac{x}{3} - 6x = 0$$

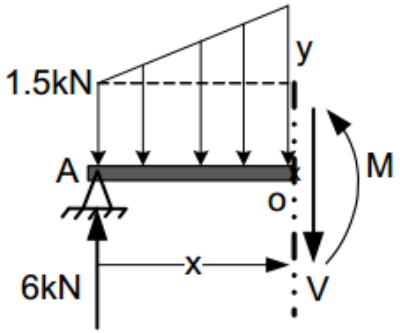

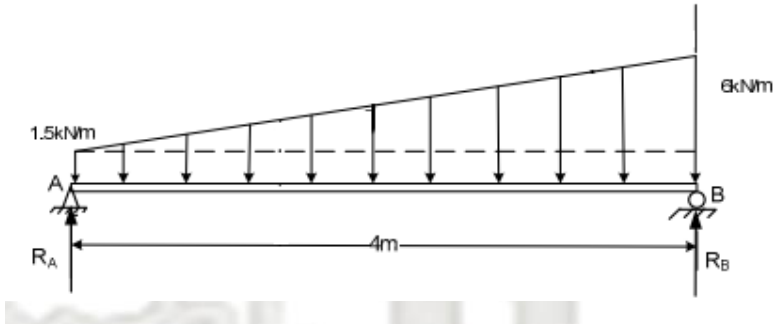

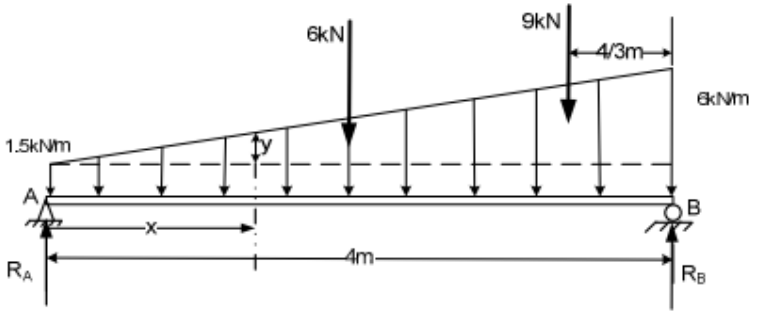

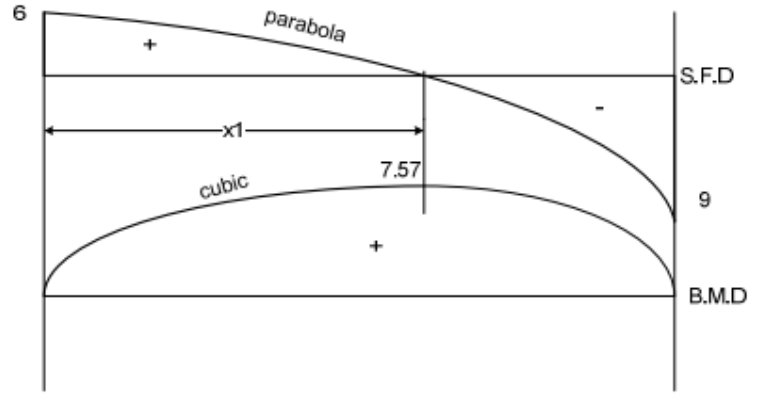

EXAMPLE 3-14

Draw the shear and moment diagrams for the beam shown in the figure and find the position of max. bending moment..

