Ashur University College

Civil Engineering Department

STRENGTH OF MATERIALS

Second Class

2018 – 2019

First Semester

CH. 3 : *Strain* –Part 1

prepared by:

Dr. Sabah Noory Al Ani

3.1 Introduction:

In engineering the deformation of a body is specified using the concepts of normal and shear strain. Whenever a force is applied to a body, it will tend to change the body's shape. These changes are referred to as deformation, and they may be highly visible or practically unnoticeable. Deformation of a body can also occur when the temperature of the body is changed. The figure shows the before and after positions of three different line segments on this rubber membrane which is subjected to tension. The vertical line is lengthened, the horizontal line is shortened, and the inclined line changes its length and rotates.

If a bar is subjected to a direct tension, the bar will change in length. If the bar has an original length "L" and change in length by an amount "δL" the strain produces is defined as follows

3.2 Normal Strain (Axial Strain):

If an axial load P is applied to the bar in the Figure, it will change the bar's length Lo to a length L. We will define the average normal strain e (epsilon) of the bar as the change in its length d (delta) = L - Lo divided by its original length, that is:

$$\varepsilon = \frac{L - L_o}{L_o} = \frac{\delta L}{L_o} \text{ (dimensionless quantity)}$$

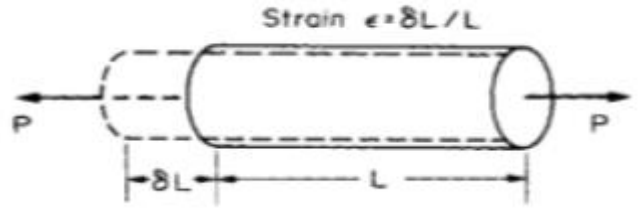

3.3 Stress-Strain Diagram :

Suppose that a metal specimen be placed in tension-compression testing machine. A the axial load is gradually increased in increments, the total elongation over the gage length is measured at each increment of the load and this is continued until failure of the specimen takes place. Knowing the original cross-sectional area and length of the specimen, the normal stress σ and the strain ε can be obtained. The graph of these quantities with the stress σ along the y-axis and the strain ε along the x-axis is called the stress-strain diagram. The stress-strain diagram differs in form for various materials. The diagram shown below is that for a medium carbon structural steel.

Metallic engineering materials are classified as either ductile or brittle materials. A ductile material is one having relatively large tensile strains up to the point of rupture like structural steel and aluminum, whereas brittle materials has a relatively small strain up to the point of rupture like cast iron and concrete. An arbitrary strain of 0.05 mm/mm is frequently taken as the dividing line between these two classes.

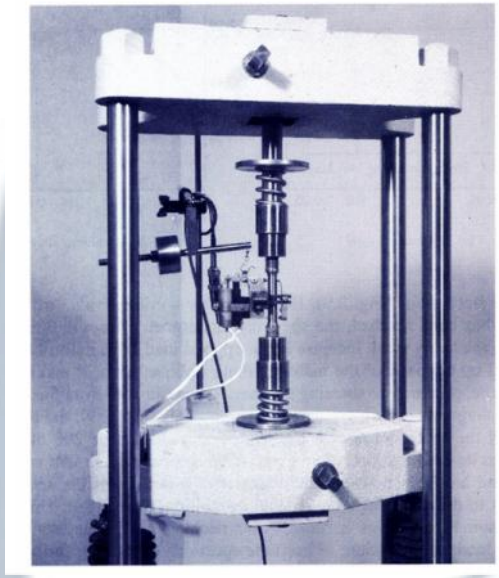

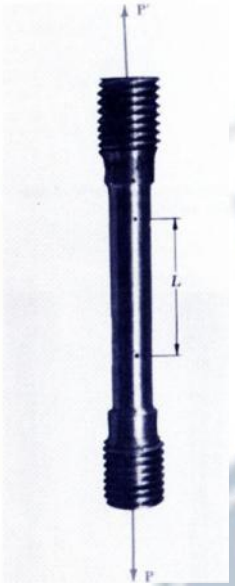

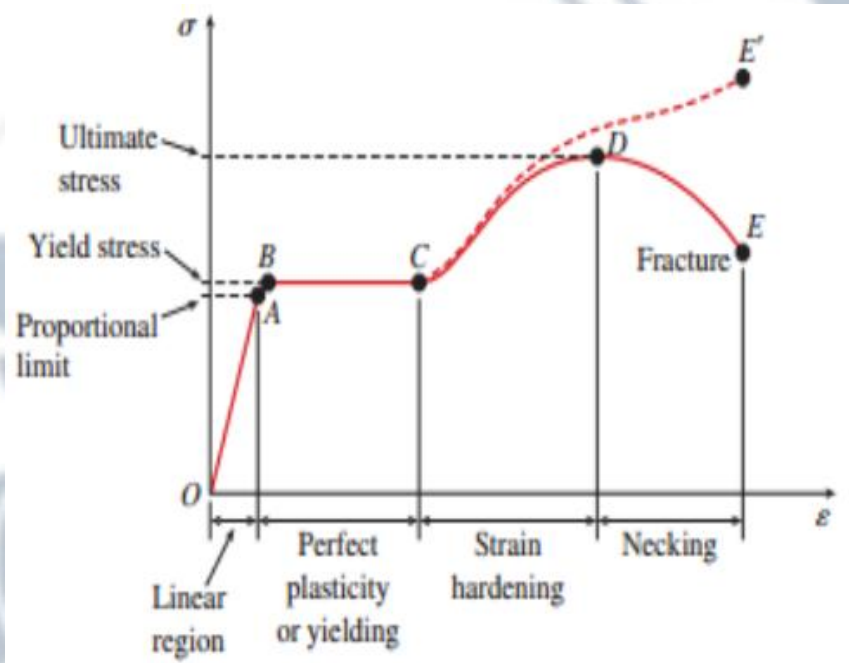

3.3.1 Proportional Limit (Hook's Law):

From the origin to the point called proportional limit, the stress strain curve is a straight line. This linear relation was first noticed by Robert Hook in 1678 and is called Hook's Law that within the proportional limit, the stress is directly proportional to strain or

$\sigma \propto \epsilon$ or $\sigma = k\,\epsilon$

The constant of proportionality k is called the Modulus of Elasticity (E) or Young' Modulus and is equal to the slope of the stress-strain diagram from the origin to proportional limit. Then:

$$\sigma = E\,\epsilon$$

3.3.2 Elastic limit:

The elastic limit is the limit beyond which the material will no longer go back to its original shape when the load is removed, or it is the maximum stress that may be developed such that there is no permanent deformation when the load is entirely removed.

3.3.3 Elastic and Plastic Range:

The region in stress -strain diagram from the origin to proportional limit is called the elastic range. The region from proportional limit to rupture is called plastic range.

3.3.4 Yield Point:

Yield point is the point at which the material will have an appreciable elongation or yielding without any increase in load.

3.3.5 Ultimate Strength:

The maximum coordinate in the stress -strain diagram is the ultimate strength or tensile strength.

3.3.6 Modulus of resilience:

Modulus of resilience is the work done on a unit volume of material as the force is gradually increased from the origin to plastic limit in N.m/m. This may be calculated as the area under the stress-strain curve from the origin up to the elastic limit (the shaded area in the figure).The resilience of the material is its ability to absorb energy without creating permanent distortion.

3.3.6 Modulus of toughness:

Modulus of toughness is the work done on the unit volume of material as the force is gradually increased from the origin to rupture in N.m/m . This may be calculated as the area under the entire stress-strain curve from the origin to rupture. The toughness of a material is its ability to absorb energy without causing it to break.

3.3.7 True Stress–Strain Diagram

Instead of always using the original cross-sectional area and specimen length to calculate the (engineering) stress and strain, we could have used the actual cross-sectional area and specimen length at the instant the load is measured. The values of stress and strain found from these measurements are called true stress and true strain, and a plot of their values is called the true stress–strain diagram

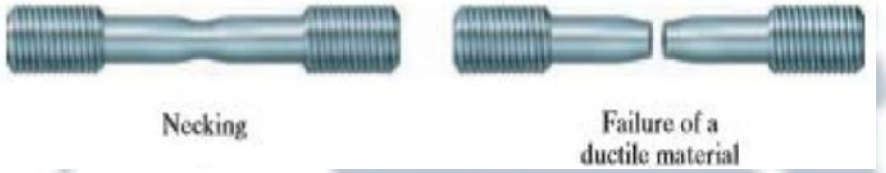

3.3.8 WORKING STRESS, ALLOWABLE STRESS, AND FACTOR OF SAFETY

Working stress is defined as the actual stress of a material under a given loading. The maximum safe stress that a material can carry is termed as the allowable stress. The allowable stress should be limited to values not exceeding the proportional limit. However, since proportional limit is difficult to determine accurately, the allowable tress is taken as either the yield point or ultimate strength divided by a factor of safety. The ratio of this strength (ultimate or yield strength) to allowable strength is called the factor of safety.

$$Factor\ of\ Safety = \frac{Maximum\ Stress}{Allowable\ Working\ Stress}$$

$$\sigma w = \frac{\sigma yp}{Nyp} \qquad \text{or } \sigma w = \frac{\sigma ult}{Nult}$$

Typical values changes from **2.5**(for static loads) to **10** (for shock loads)

$$\sigma w = \frac{1}{2}\,\sigma yp$$

Comparative stress-strain diagram for different materials.

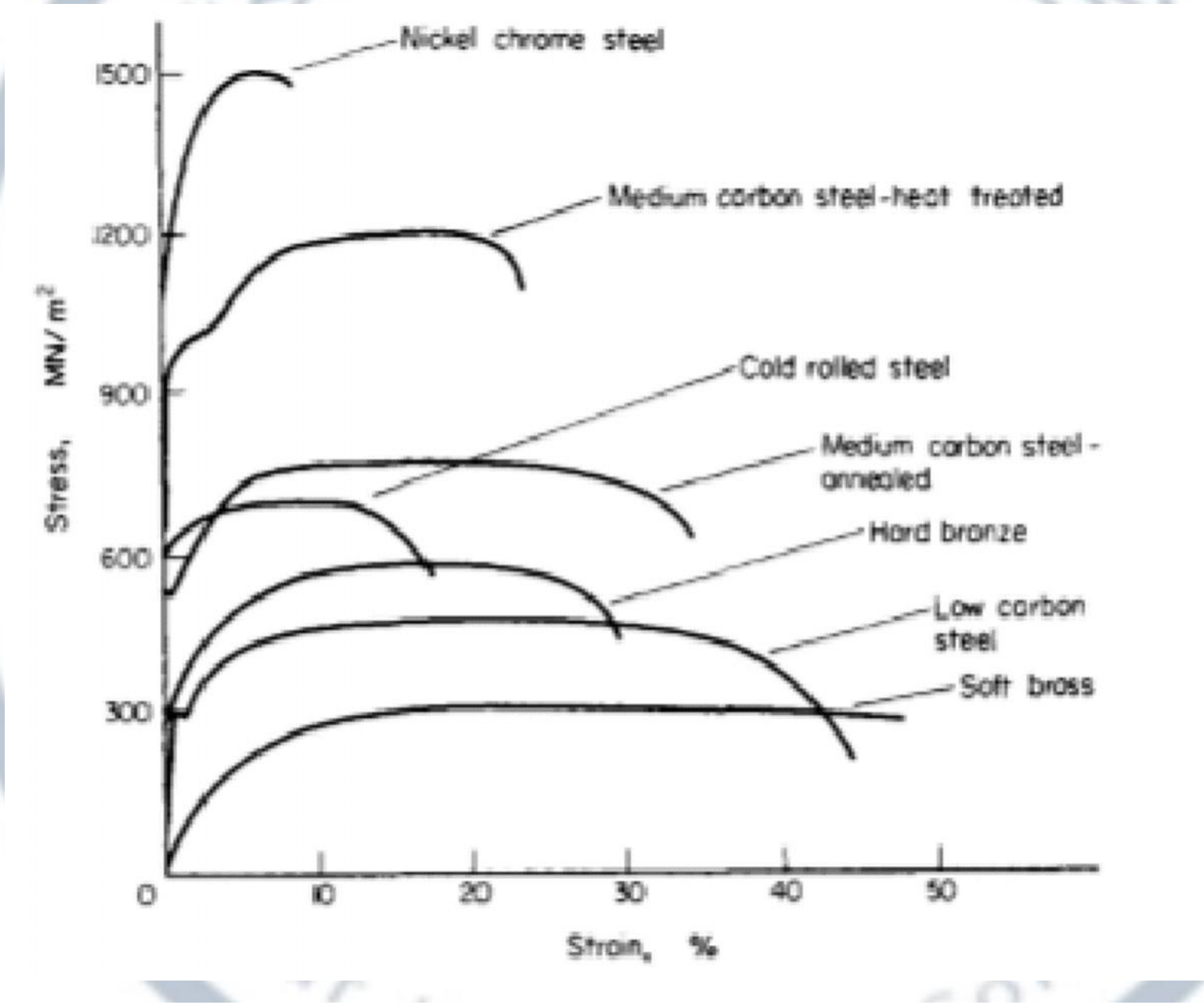

3.3.9 AXIAL DEFORMATION

In the linear portion of the stress-strain diagram, the tress is proportional to strain and is given by:

$\sigma = E\varepsilon$

since $\sigma = P / A$ and $\varepsilon e = \delta / L$, then $P / A = E\,\delta / L$. Solving for δ,

$$\delta = \frac{PL}{AE} = \frac{\sigma L}{E}$$

To use this formula, the load must be axial, the bar must have a uniform cross-sectional area, and the stress must not exceed the proportional limit. If however, the cross-sectional area is not uniform, the axial deformation can be determined by considering a differential length and applying integration. If however, the cross-sectional area is not uniform, the axial deformation can be determined by considering a differential length and applying integration.

where A = ty and y and t, if variable, must be expressed in terms of x.

For a rod of unit mass ρ suspended vertically from one end, the total elongation due to its own weight is

$$\delta = \frac{\rho g L^2}{2E} = \frac{MgL}{2AE}$$

where ρ is in kg/m^3, L is the length of the rod in mm, M is the total mass of the rod in kg, A is the cross-sectional area of the rod in mm^2, and g = 9.81 m/s^2.

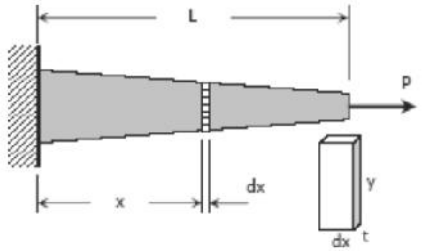

$$\delta = \frac{P}{E}\int_0^L \frac{dx}{A}$$

3.3.10 Axial Deformation Of Uniform Members, Plates and Solids

$$\text{Stress } (\sigma) = \frac{Load}{Area} = \frac{P}{A}$$

In the SI system of units, if load is measured in newton and area in mm^2 then stress unit (N/mm^2 or MPa).

$$\text{Strain } (\varepsilon) = \frac{Change\ in\ Length}{Original\ Length} = \frac{\Delta L}{L}$$

Stain has no unit (a ratio of two quantities with the same unit).

whilst materials are elastic, stress is proportional to strain was first noticed by **Sir Robert Hooke** in 1678. ***Hooke's law,*** in its simplest form:


Robert Hooke

$$\text{Stress } (\sigma) \ \alpha \ \text{Strain } (\varepsilon)$$

$$\frac{Stress}{Strain} = \text{Constant}$$

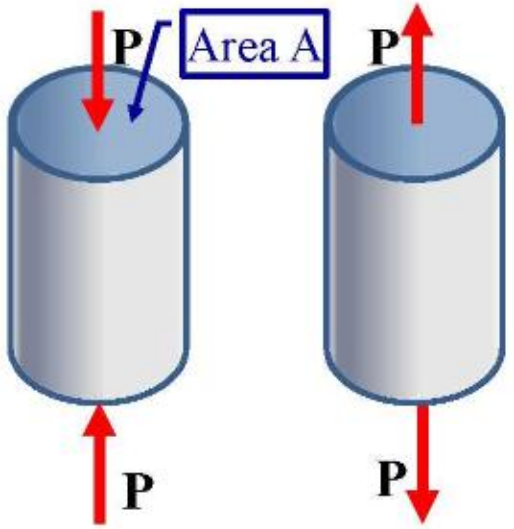

Fig. (4-1):Direct stress

This constant is given the symbol ***E*** and termed the ***modulus of elasticity*** or ***Young's modulus,*** thus:

$$\text{Stress } (\sigma) \ \alpha \ \text{Strain } (\varepsilon)$$

$$\frac{Stress}{Strain} = E \Rightarrow \frac{\sigma}{\varepsilon} = E \Rightarrow \sigma = E * \varepsilon$$

$$\frac{P}{A} = E * \frac{\Delta L}{L}$$

$$\Delta L = \frac{P*L}{A*E} \quad or \quad \delta = \frac{P*L}{A*E}$$

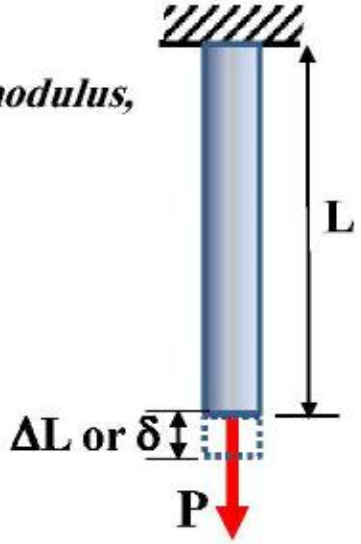

Fig. (4-2):Direct strain

ΔL : Axial Deformation (elongation, shortening), ΔL= δ = Δ (unit: mm, m, in)

P : Applied load, Force, Reaction, Weight,(unit: N, kN, lb)

L : Length of bar or member (unit: mm, m, in, ft)

A : Cross-sectional area (unit: mm^2, m^2, in^2, ft^2)

E : Modulus of Elasticity (unit: GPa (kN/mm^2), MPa (N/mm^2), Pa(N/m^2), psi (lb/in^2), ksi (kip/in^2)).

Ex. 3.1 Determine the average normal strains in the two wires in the Figure shown if the ring at A moves to A′.

Solution:

The original length of each wire is

$$L_{AB} = L_{AC} = \sqrt{3^2 + 4^2} = 5m$$

The final lengths are:

$$L_{A'B} = \sqrt{(3-0.01)^2 + (4+0.02)^2} = 5.01004m$$

$$L_{A'C} = \sqrt{(3+0.01)^2 + (4+0.02)^2} = 5.022m$$

The normal strains:

$$\varepsilon_{AB} = \frac{L_{A'B} - L_{AB}}{L_{AB}} = \frac{5.01004 - 5}{5} = 2.01 \times 10^{-3} m/m$$

$$\varepsilon_{AC} = \frac{L_{A'C} - L_{AC}}{L_{AC}} = \frac{5.022 - 5}{5} = 4.4 \times 10^{-3} m/m$$

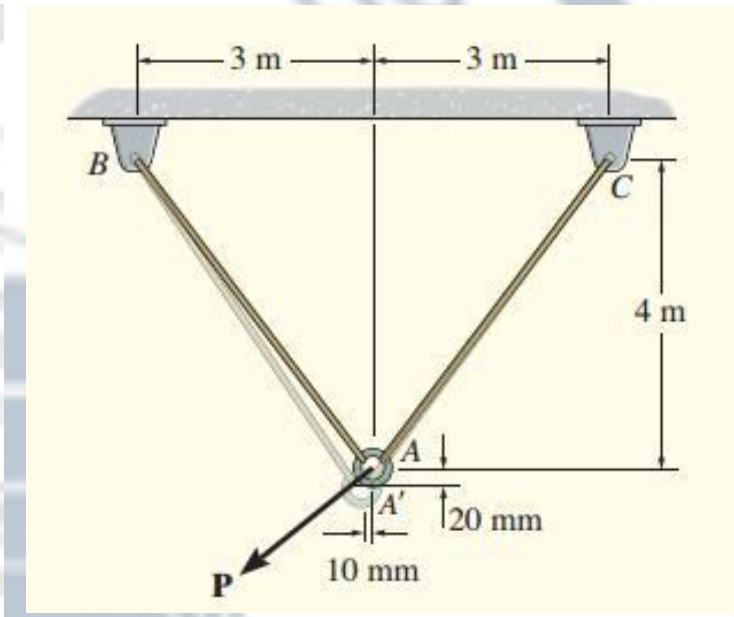

Ex. 3.2 When force P is applied to the rigid lever arm ABC shown in the Figure, the arm rotates counterclockwise about pin A through an angle of 0.05 °. Determine the normal strain in wire BD.

$$\tan(0.05) = \frac{BB'}{400}$$

$$BB' = 400 \times \tan(0.05) = 0.349mm$$

$$L_{DB'} = 300 + 0.349 = 300.349mm$$

$$\varepsilon_{DB'} = \frac{L_{DB'} - L_{DB}}{L_{DB}} = \frac{300.349 - 300}{300} = 0.00116m/m$$

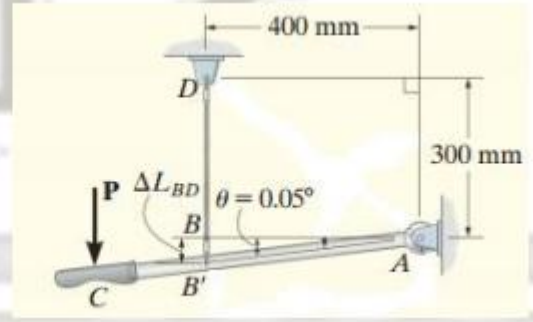

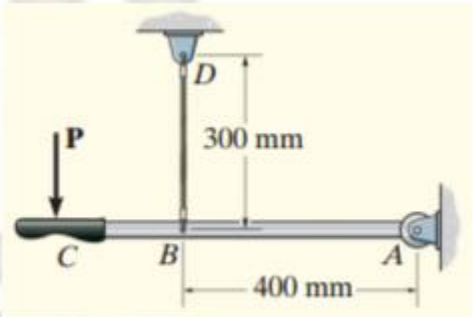

Ex. 3.3 A steel rod having a cross-sectional area of 300 mm_2 and a length of 150 m is suspended vertically from one end. It supports a tensile load of 20 kN at the lower end. If the unit mass of steel is 7850 kg/m_3 and E = 200 × 10_3 $MN/m2$, find the total elongation of the rod.

Solution:

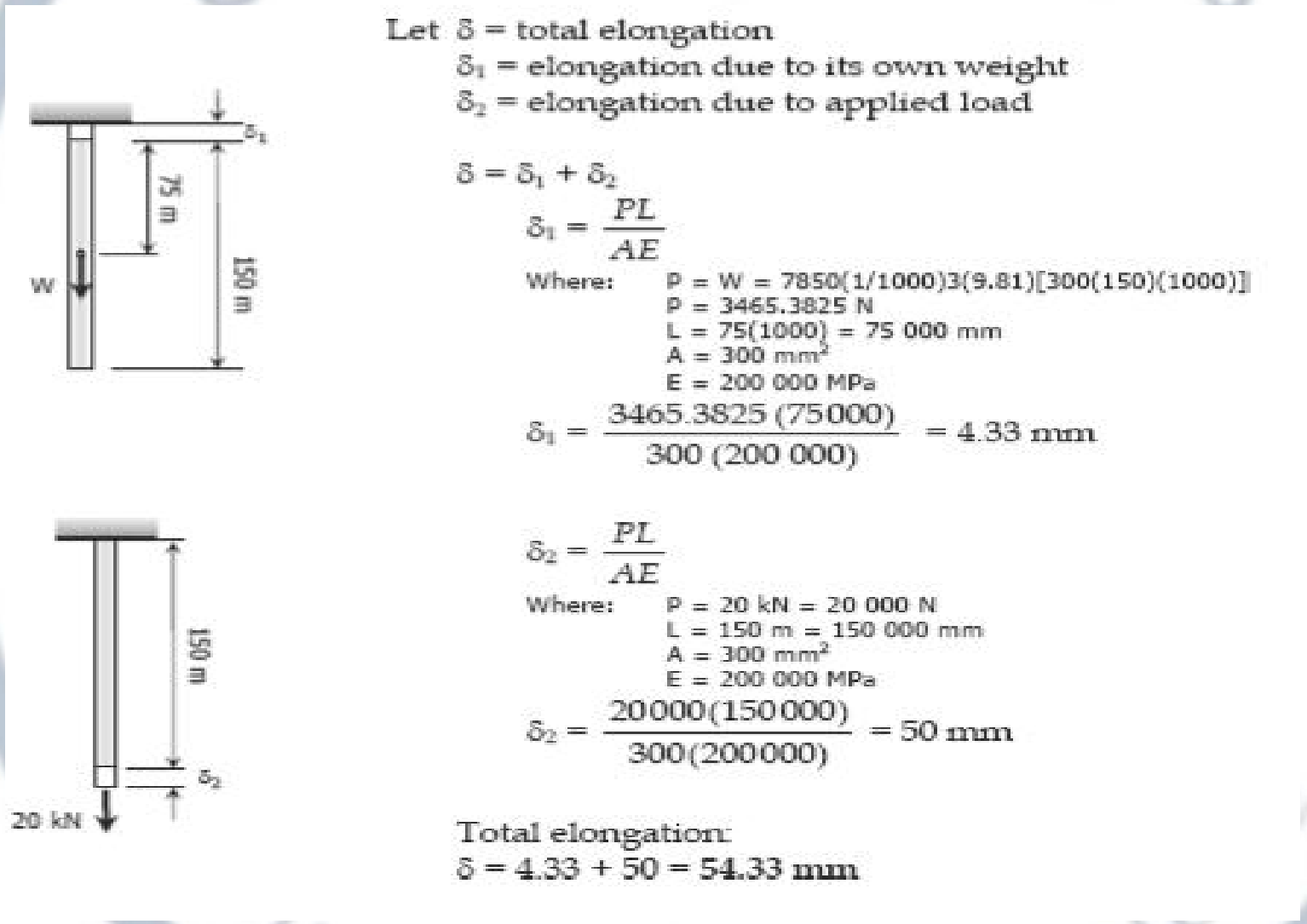

Let δ = total elongation

δ_1 = elongation due to its own weight

δ_2 = elongation due to applied load

$$\delta = \delta_1 + \delta_2$$

$$\delta_1 = \frac{PL}{AE}$$

Where: P = W = 7850(1/1000)3(9.81)[300(150)(1000)]
P = 3465.3825 N
L = 75(1000) = 75 000 mm
A = 300 mm^2
E = 200 000 MPa

$$\delta_1 = \frac{3465.3825\,(75000)}{300\,(200\,000)} = 4.33 \text{ mm}$$

$$\delta_2 = \frac{PL}{AE}$$

Where: P = 20 kN = 20 000 N
L = 150 m = 150 000 mm
A = 300 mm^2
E = 200 000 MPa

$$\delta_2 = \frac{20000(150000)}{300(200000)} = 50 \text{ mm}$$

Total elongation:

$$\delta = 4.33 + 50 = 54.33 \text{ mm}$$

Ex. 3.4 A steel wire 30 ft long, hanging vertically, supports a load of 500 lb. Neglecting the weight of the wire, determine the required diameter if the stress is not to exceed 20 ksi and the total elongation is not to exceed 0.20 in. Assume E = 29 × 10^6 psi. .

Solution:

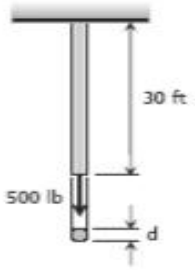

Based on maximum allowable stress:

$$\sigma = \frac{P}{A}$$

$$20\,000 = \frac{500}{\frac{1}{4}\pi d^2}$$

$$d = 0.0318 \text{ in}$$

Based on maximum allowable deformation:

$$\delta = \frac{PL}{AE}$$

$$0.20 = \frac{500(30\times12)}{\frac{1}{4}\pi d^2(29\times10^6)}$$

$$d = 0.0395 \text{ in}$$

Use the bigger diameter, $d = 0.0395$ in

Ex. 3.5

An aluminum bar of 50mm diameter with a 300mm gage length tested in machine as shown by applied force P is 100kN, while the measured elongation 0.219mm and the diameter's dimension is decreased by 0.01215mm. Calculate the constants ν and E of the material.

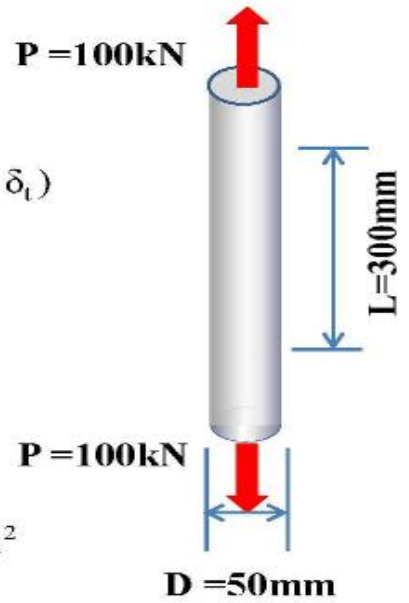

Transverse or lateral strain : $\epsilon_t = \frac{\delta_t}{D} = \frac{-0.01215}{50} = -0.000243$

Transverse strain (ε_t) is negative, since the diameter of the bar decreased by (δ_t)

Axial strain : $\epsilon_a = \frac{\delta}{L} = \frac{0.219}{300} = 0.00073$

Poisson's ratio : $\nu = -\frac{\epsilon_t}{\epsilon_a} = -\frac{(-0.000243)}{0.00073} = 0.333$

Area of bar : $A = \frac{1}{4}\pi(0.050)^2 = 1.96 * 10^{-3} m^2$

$$E = \frac{PL}{A\delta} = \frac{(100kN) * (0.3m)}{(1.96 * 10^{-3}m^2) * (0.219 * 10^{-3}m)} = 70 * 10^6 kN/m^2$$

3.4 DEFLECTION OF AXIALLY LOADED RODS

Using Hooke's law and the definitions of stress and strain, we will now develop an equation that can be used to determine the elastic displacement of a member subjected to axial loads. The free-body diagram of the axially loaded element is shown in Figure. The resultant internal axial force will be a function of x since the external distributed loading will cause it to vary along the length of the bar.

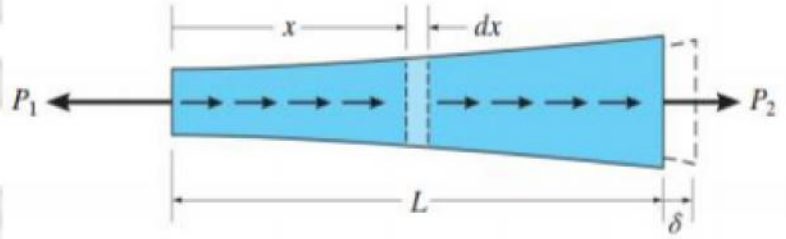

Provided the stress does not exceed the proportional limit, we can apply Hooke's law

$$\sigma = \frac{P_x}{A_x}$$

$$\varepsilon = \frac{d\delta}{dx}$$

$$\frac{P_x}{A_x} = E_x\left(\frac{d\delta}{dx}\right) \rightarrow d\delta = \frac{P_x d_x}{A_x E_x}$$

$$\delta = \int_0^L \frac{P_x d_x}{A_x E_x}$$

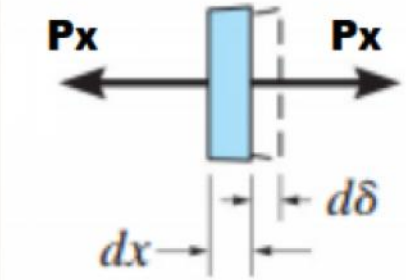

For constant load Px, cross-sectional area Ax and Modulus of elasticity Ex, the above equation becomes:

$$\delta = \frac{PL}{AE}$$

If the structural member has some segments with different load, area, and E in each segment, the total deflection equals the sum of the deflection of each segment.

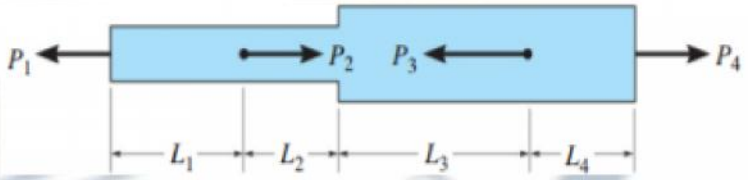

$$\delta = \sum \frac{PL}{AE}$$

Ex. 3.6

The uniform steel bar shown in the Figure has a diameter of 50 mm and is subjected to the loading shown. Determine the displacement at D. Assume E=200 GPa.

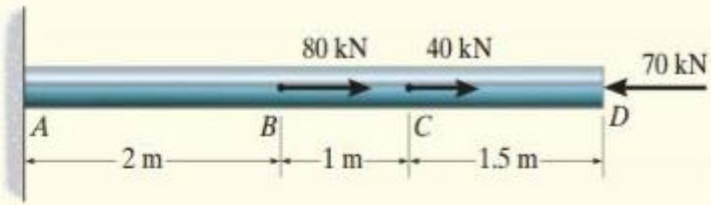

$$\delta_D = \sum \frac{PL}{AE}$$

$$\delta_D = \frac{-70\times1000\times1500}{\pi\times25^2\times200000} + \frac{-30\times1000\times1000}{\pi\times25^2\times200000} + \frac{50\times1000\times2000}{\pi\times25^2\times200000}$$

$$\delta_D = -0.0891mm$$

This negative result indicates that point D moves to the left.

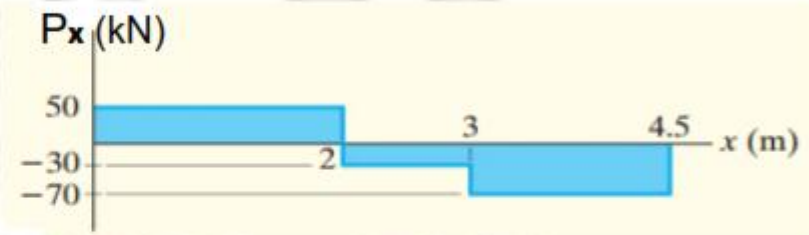

Ex. 3.7

A member is made of a material that has a specific weight of γ = 6 kN/m3 and modulus of elasticity of E=9 GPa. Determine how far of the cone's end is displaced due to gravity when it is suspended in the vertical position.

$$\frac{x}{y} = \frac{0.3}{3} \rightarrow x = 0.1y \rightarrow Vol. = \frac{1}{3}\pi x^2 y = \frac{\pi\times(0.1y)^2\times y}{3} = 0.01047y^3$$

$$W = \gamma \times V$$

$$\sum Fy = 0 \rightarrow P_y = 6\times1000\times0.01047y^3 = 62.83y^3$$

$$A_y = \pi x^2 = 0.03142y^2$$

$$\delta = \int_0^L \frac{Pdy}{AE} = \int_0^3 \frac{62.83y^3dy}{0.03142y^2\times9\times10^9} = 222.2\times10^{-9}\int_0^3 ydy = \frac{222.2\times10^{-6}}{2}\left[y^2\right]_0^3$$

$$\delta = 1\times10^{-6}m$$



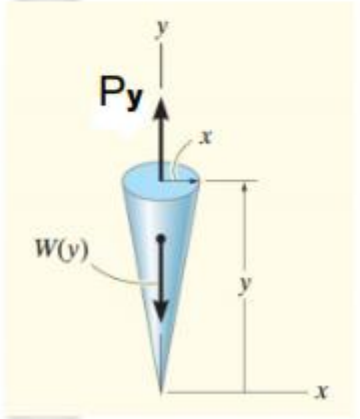

Ex. 3.8 An aluminum bar having a cross-sectional area of 160 mm2carries the axial loads at positions shown in figure, if E=70Gpa compute the total deformation of the bar. Assume the bar is suitably braced to prevent buckling.

Solution:

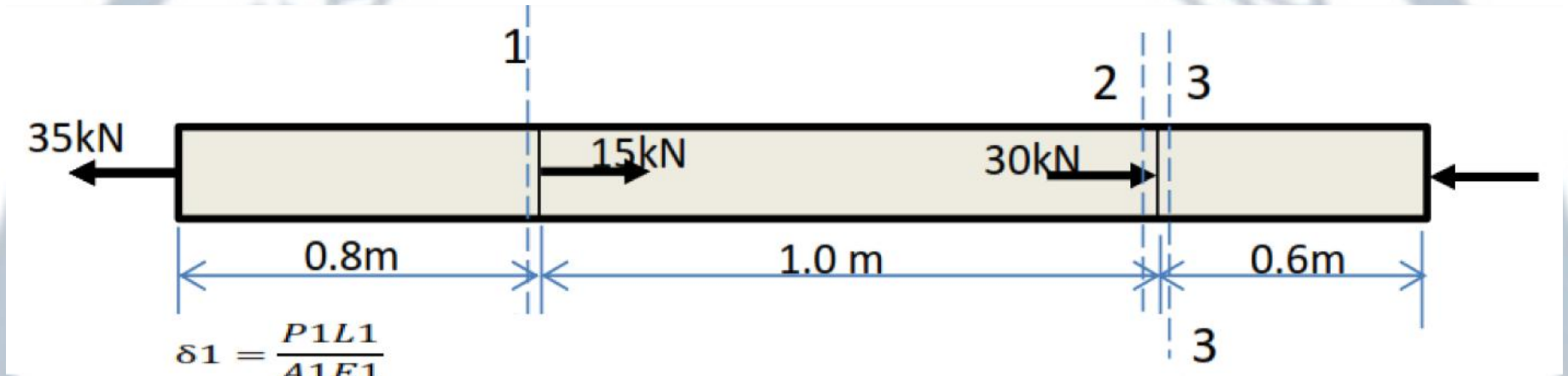

$$\delta 1 = \frac{P1L1}{A1E1}$$

$$= \frac{35 * 10\text{^}380.8}{160 * 10^{-6} * 70 * 10^{9}} = 0.0025\ m\ (elongation)$$

$$\delta 2 = \frac{P2L2}{AE}$$

$$= \frac{20 * 10^{3} * 1.0}{160 * 10^{-6} * 70 * 10^{9}} = 0.00179\ m\ (elongation)$$

$$\delta 3 = \frac{P3L3}{AE}$$

$$= \frac{10 * 0.6 * 10^{3}}{160 * 10^{-6} * 70 * 10^{9}} = 0.00054\ m\ (cntraction)$$

$$\delta = \delta 1 + \delta 2 + \delta 3$$

$$\delta = 0.0025 + 0.00179 - 0.00054$$

$$\delta = 0.00375\ m$$

$$= 3.75\ mm$$

Ex. 3.9 The rigid bars shown in figure are supported by roller at C and pinned at A and D. A steel rod at B helps support the load of 50 KN. Compute the vertical displacement of the roller at C.

Solution:

$$\sum MD = 0$$

$$50 \times 20 = Rcy \times 4$$

$$Rcy = 25\ kN$$

$$\sum MA = 0$$

$$25 \times 4.5 = 3T$$

$$T = 37.5\ kN$$

$$\delta B = \frac{TL}{AE}$$

$$= \frac{37.5 \times 10^3 \times 3}{300 \times 10^{-6} \times 200 \times 10^9} = 0.00188\ mm$$

$$\frac{\delta c}{4.5} = \frac{\delta B}{3}$$

$$\delta c = 0.00281\ mm$$

$$= 2.81\ m$$

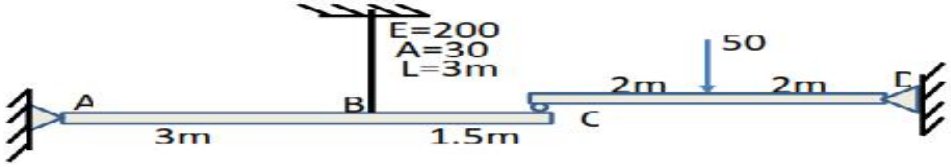

Ex. 3.10 The rigid bars shown in figure are supported by roller at C and pinned at A and D. A steel rod at B helps support the load of 50 KN. Compute the vertical displacement of the roller at C.

Solution:

$$\delta_{total} = \left(\frac{PL}{AE}\right)_{st} + \left(\frac{PL}{AE}\right)_{al}$$

$$0.25 = \frac{P \times 300}{200 \times 50 \times 50} + \frac{P \times 500}{70 \times 100 \times 100}$$

$$0.25 = 0.0006P + 0.00071P$$

$$P = 190.8kN$$

$$\delta_{al} = \frac{190.8 \times 500}{70 \times 100 \times 100} = 0.136mm$$

$$\delta_{st} = \frac{190.8 \times 300}{200 \times 50 \times 50} = 0.114mm$$

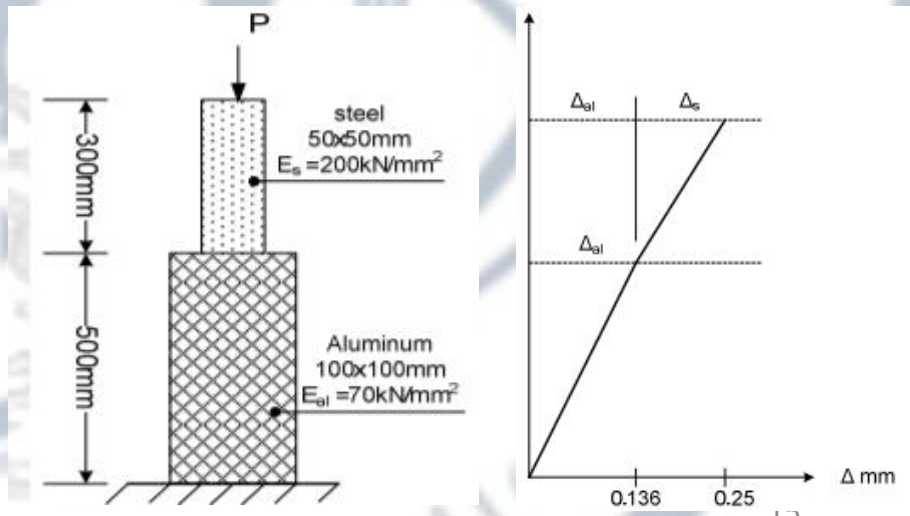

Ex. 3.11: The rigid bar AB, attached to two vertical rods as shown in Fig. P-213, is horizontal before the load P is applied. Determine the vertical movement of P if its magnitude is 50 kN.

Solution:

Free body diagram:

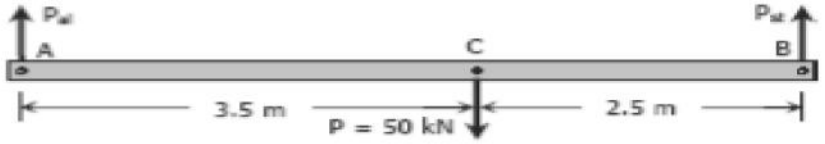

For aluminum:

$[\Sigma M_B = 0]$ $\quad 6P_{al} = 2.5(50)$

$P_{al} = 20.83$ kN

$\left[\delta = \frac{PL}{AE}\right]_{al}$ $\quad \delta_{al} = \frac{20.83(3)1000^2}{500(70000)}$

$\delta_{al} = 1.78$ mm

For steel:

$[\Sigma M_A = 0]$ $\quad 6P_{st} = 3.5(50)$

$P_{st} = 29.17$ kN

$\left[\delta = \frac{PL}{AE}\right]_{st}$ $\quad \delta_{st} = \frac{29.17(4)1000^2}{300(200000)}$

$\delta_{st} = 1.94$ mm

Movement diagram:



$\frac{y}{3.5} = \frac{1.94 - 1.78}{6}$

$y = 0.09$ mm

δ_B = vertical movement of P

$\delta_B = 1.78 + y = 1.78 + 0.09$

$\delta_B = 1.87$ mm

Figure P-213

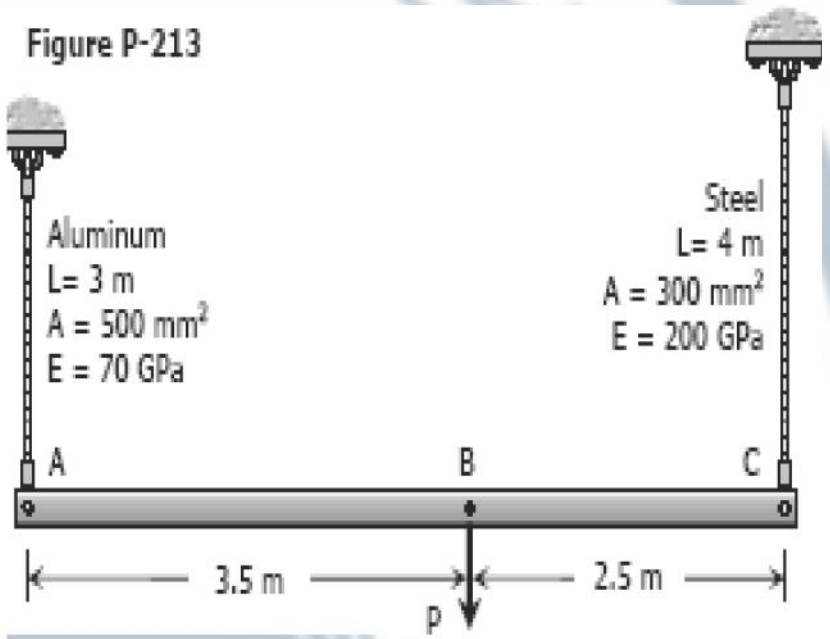

Ex. 3.12: The rigid bars AB and CD shown in Fig. P-214 are supported by pins at A and C and the two rods. Determine the maximum force P that can be applied as shown if its vertical movement is limited to 5 mm. Neglect the weights of all members.

Solution:

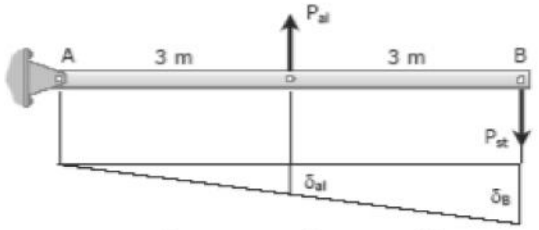

FBD and movement diagram of bar AB

$[\sum M_A = 0]$ $\quad 3P_{al} = 6P_{st}$

$P_{al} = 2P_{st}$

By ratio and proportion:

$$\frac{\delta_B}{6} = \frac{\delta_{al}}{3}$$

$$\delta_B = 2\delta_{al} = 2\left[\frac{PL}{AE}\right]_{al}$$

$$\delta_B = 2\left[\frac{P_{al}(2000)}{500(70000)}\right]$$

$$\delta_B = \tfrac{1}{8750} P_{al} = \tfrac{1}{8750} (2P_{st})$$

$$\delta_B = \tfrac{1}{4375} P_{st} \rightarrow \text{movement of B}$$

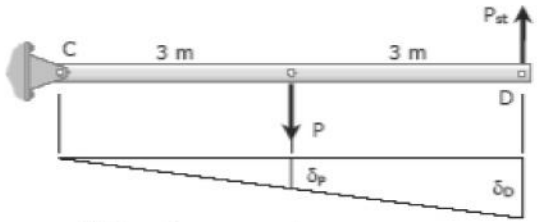

FBD and movement diagram of bar CD

Movement of D:

$$\delta_D = \delta_{st} + \delta_B = \left[\frac{PL}{AE}\right]_{st} + \tfrac{1}{4375} P_{st}$$

$$\delta_D = \frac{P_{st}(2000)}{300(200000)} + \tfrac{1}{4375} P_{st}$$

$$\delta_D = \tfrac{11}{42000} P_{st}$$

$[\sum M_C = 0]$ $\quad 6P_{st} = 3P$

$P_{st} = \tfrac{1}{2} P$

By ratio and proportion:

$$\frac{\delta_P}{3} = \frac{\delta_D}{6}$$

$$\delta_P = \tfrac{1}{2} \delta_D = \tfrac{1}{2} \left(\tfrac{11}{42000} P_{st}\right)$$

$$\delta_P = \tfrac{11}{84000} P_{st}$$

$$5 = \tfrac{11}{84000} \left(\tfrac{1}{2} P\right)$$

$$P = 76\,363.64 \text{ N} = \mathbf{76.4 \text{ kN}}$$

Figure P-214

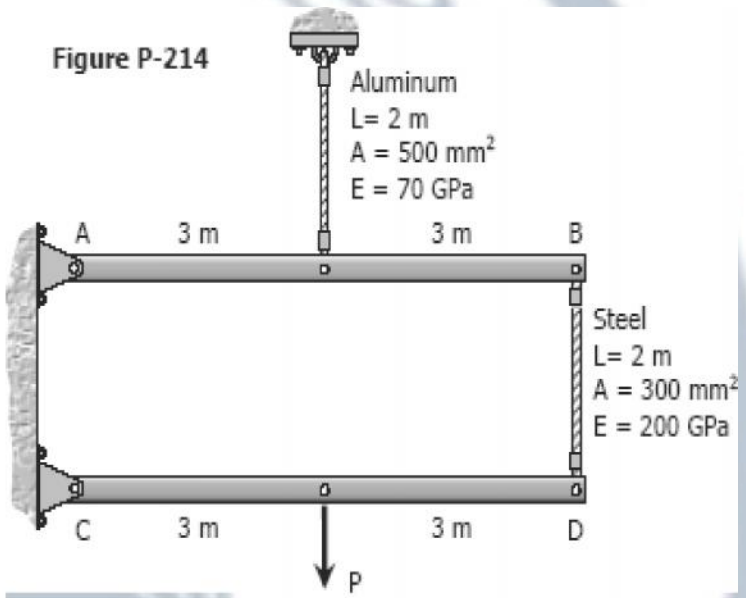

3.4 H.W

H.W 3.1 : A bronze bar is fastened between a steel bar and an aluminum bar as shown in the Figure. Axial loads are applied at the positions indicated. Find the largest value of P that will not exceed an overall deformation of 3.0 mm, or the following stresses: 140 MPa in the steel, 120 Mpa in the bronze, and 80 MPa in the aluminum. Use Est = 200 GPa, Eal = 70 GPa, and Ebr = 83 GPa.

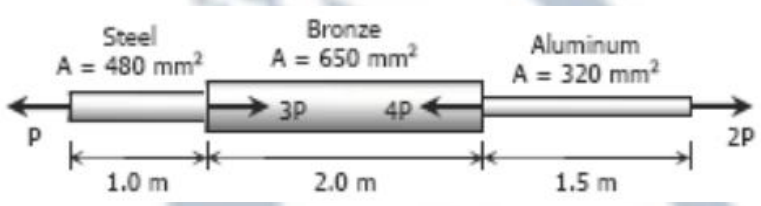

H.W 3.2 : Rigid beam AB rests on the two short posts shown in Figure.. AC is made of steel and has a diameter of 20 mm, and BD is made of aluminum and has a diameter of 40 mm. Determine the displacement of point F on AB if a vertical load of 90 kN is applied over this point. Take Est = 200 GPa, Eal = 70 GPa.

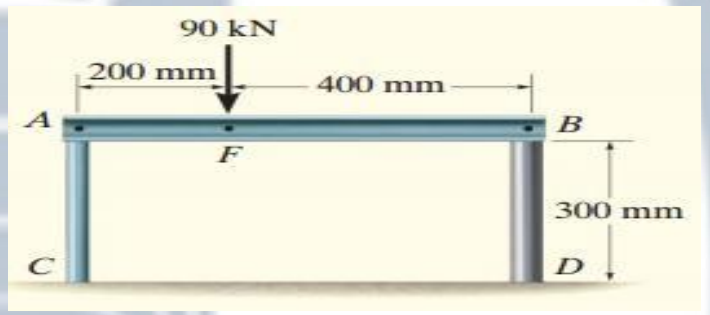

H.W 3.3 : The horizontal rigid beam ABCD is supported by vertical bars BE and CF and is loaded by vertical forces P1=400 kN and P2=360 kN acting at points A and D, respectively. Bars BE and CF are made of steel (E=200 GPa) and have cross-sectional areas ABE=11,100 mm2 and ACF=9,280 mm2. The distances between various points on the bars are shown in the figure. Determine the vertical displacements of points A and D.

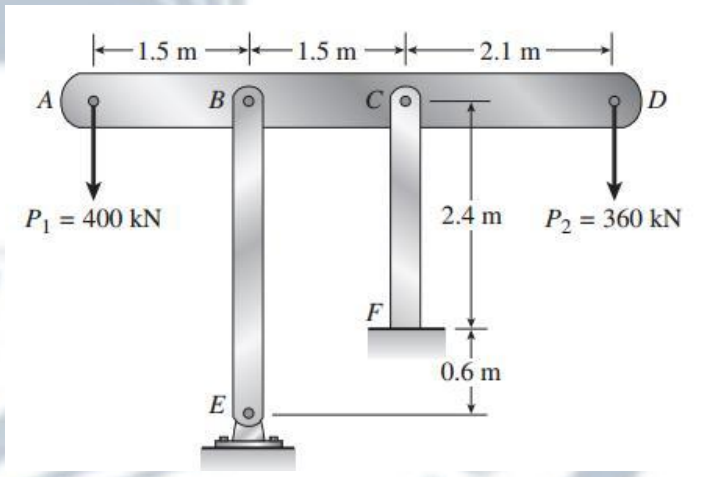

•H.W 3.4 : The following data were recorded during the tensile test of a 14-mm-diameter mild steel rod. The gage length was 50 mm.

Load (N)	Elongation (mm)	Load (N)	Elongation (mm)
0	0	46200	1.25
6310	0.010	52400	2.50
12600	0.020	58500	4.50
18800	0.030	68000	7.50
25100	0.040	59000	12.50
31300	0.050	67800	15.50
37900	0.060	65000	20.00
40100	0.163	61500	Fracture
41600	0.433		

Plot the stress-strain diagram and determine the following mechanical properties: (a) proportional limits; (b) modulus of elasticity; (c) yield point; (d) ultimate strength; and (e) rupture strength.