Digital Control

By

Dr. Rabih Ali Sbera

Department of Computer Engineering Techniques -3rd

2025-2026



Microcontroller Architecture

Microcontroller Architecture

PIC Microcontroller architecture is based on Harvard architecture and supports RISC architecture (Reduced Instruction Set Computer). PIC microcontroller architecture consists of memory organization (ram, rom, stack), CPU, timers, counter, ADC, DAC, serial communication, CCP module and I/O ports. PIC microcontroller also supports the protocols like CAN, SPI, UART for interfacing with other peripherals.

FIGURE 3-1: PIC16F8X BLOCK DIAGRAM

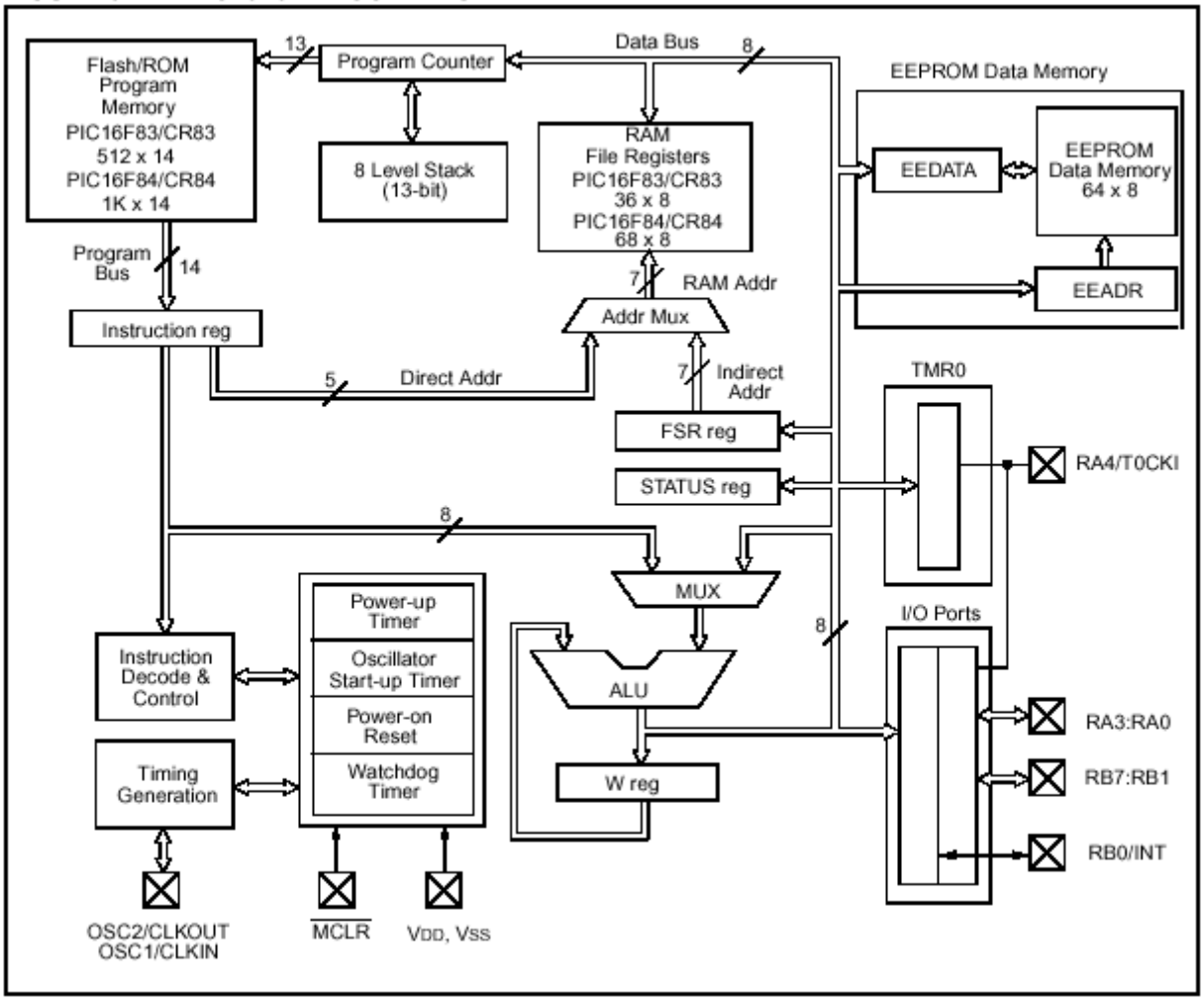

1. CPU (Central Processing Unit):

PIC microcontroller's CPU consists of

- Arithmetic logic unit (ALU)
- Memory unit (MU)
- Control unit (CU)

- Accumulator

ALU is used for arithmetic operations and for logical decisions. Memory is used for storing the instructions after processing. Control unit is used to control the internal and external peripherals which are connected to the CPU and accumulator is used for storing the results.

2. MEMORY ORGANIZATION:

PIC microcontroller memory module consists of mainly 3 types of memories:

- **PROGRAM MEMORY:**

It contains the written program after we burned it in microcontroller. Program Counter executes commands stored in the program memory, one after the other. Pic microcontroller can have 8K words x 14 bits of Flash program memory that can be electrically erased and reprogrammed. Whenever we burn program into the micro, we erase an old program and write a new one.

- **DATA MEMORY:**

It is a RAM type which is used to store the data temporarily in its registers. The RAM memory is classified into banks. Each bank extends up to 7Fh (128 bytes). Number of banks may vary depending on the microcontroller. PIC16F84 has only two banks. Banks contain Special Function Registers (SFR) and General Purpose Registers (GPR). The lower locations of each bank are reserved for the Special Function Registers and upper locations are for General Purpose Registers.

General Purpose Registers (GPR):

These registers don't have any special function. These are used for general purpose for multiplying, addition or subtraction and then storing the results in other registers. CPU can easily access the data in these registers.

Special Function Registers (SFR):

These registers are used for special purposes and they cannot be used as normal registers. Their function is set at the time of manufacturing. They perform the function assigned to them and user cannot change the function of SFR. Three important SFRs for programming are:

STATUS register: It changes the bank

PORT registers: It assigns logic values 0 or 1 to the ports

TRIS registers: It is a data direction register for input and output

TRISA = 0b00000001; // RA0=input, RA1-RA4=output

PORTA = 0b00001110; // RA1=1, RA2=1, RA3=1, RA4=0, RA0 لا تتأثر لأنه Input

- **DATA <u>EEPROM</u>:**

This memory allows storing the variables as a result of burning the written program. It is readable and writable during normal operation (over the full VDD range). This memory is not directly mapped in the register file. It is indirectly addressed through the SFRs. There are six SFRs which are used to read and write to this memory (EECON1, EECON2, EEDATA, EEDATH, EEADR, EEADRH).

3. <u>SERIAL COMMUNICATION:</u>

The transfer of one bit of data at time consecutively over a communication channel is called Serial Communication. There are three protocols of serial communication:

- **USART:** It stands for Universal synchronous and Asynchronous Receiver and Transmitter which provides a serial communication in two devices. In this protocol data is transmitted and received bit by bit through a single wire according to the clock pulses. To send and receive data serially the PIC <u>microcontroller</u> has two pins TXD and RXD.

- **<u>SPI Protocol</u>:** SPI stands for Serial Peripheral Interface. It is used to send data between PIC and other peripherals like sensors, shift registers and SD cards. Three wire SPI communications is supported in PIC microcontroller between two devices on a common clock source. SPI protocol has greater data handling capability than that of the USART.
- **<u>I2C Protocol</u>:** I2C stands for Inter

  <u>Integrated Circuit</u>, and this protocol is used to connect low speed devices like microcontrollers, EEPROMS and A/D converters. PIC microcontroller support two wire Interface or I2C communication between two devices which can work as both Master and Slave device.

Protocol	Number of Wires	Speed	How It Works	Number of Devices Connectable	Usage	Practical Example
USART	2 (TX, RX)	Medium	Sends and receives data one bit at a time, can be synchronous or asynchronous	2 (only two devices)	Betwee n two devices	Sending temperature sensor data from PIC to a computer
SPI	3–4 (MISO, MOSI, SCK, CS)	High	Synchronous, data transfers in parallel with clock	Typically 1–4 devices per Master; can be expanded using extra CS lines	High-speed devices	Reading data from an SD card or a fast pressure sensor

			pulse, very fast			
I²C	2 (SDA, SCL)	Low	Synchronous, supports multiple devices on the same bus, each with a unique address	Up to 127 devices on the same bus	Low-speed devices	Communicating with EEPROM to store values or reading temperature from an I²C sensor

4. INTERRUPTS:

There are 20 internal interrupts and three external interrupt sources in PIC microcontrollers which are related with different peripherals like ADC, USART, Timers, and CCP etc.

5. I/O PORTS:

Let us take PIC16 series, it consists of five ports, such as Port A, Port B, Port C, Port D and Port E.

- **Port A:**This port is 7-bit wide and can be used for both input and output. The status of TRISA register decided whether it is used as input or output port.
- **Port B:**It is an 8-bit port. This port also can be used as input and output. Moreover in input mode four of its bits are variable according to the interrupt signals.
- **Port C:**It is also an 8-bit port and can be used as both input and output port which is determined by the status of the TRISC register.
- **Port D:**This 8-bit port, unlike Port A, B and C is not an input/output port, but is used as acts as a slave port for the connection to the microprocessor When in I/O mode Port D all pins should have Schmitt Trigger buffers.
- **Port E:**It is a 3-bit port which is used as the additional feature of the control signals to the A/D converter.

6. CCP MODULE:

A CCP module works in the following three modes:

- **Capture Mode:** In this mode time is captured when a signal is arrived, or we can say that, when the CCP pin goes high it captures the value of the Timer1.

- **Compare Mode:** It works same as an analog comparator, which means that when timer 1's value reaches some reference value it will give an output signal.
- **PWM Mode:** This mode provides a 10 bit resolution pulse and duty cycle that is programmable.

7. Timers:

Timers and counters are important as timers can tell the time and count. PIC microcontroller can have up to four timers (depending upon the family) Timer0, Timer1, Timer2 and Timer3. Timer0 and Timer2 are of 8-bits while the Timer1 and Timer3 are of 16-bits, which can also be used as a counter. These timers work according to the selected modes.

8. D/A CONVERTER:

There are no **analog outputs in PIC Microcontroller.** To get analog output we have to use external Digital-to-Analog Converter (DAC). It can convert 8 bits of digital number from the eight digital outputs of PIC microcontroller.

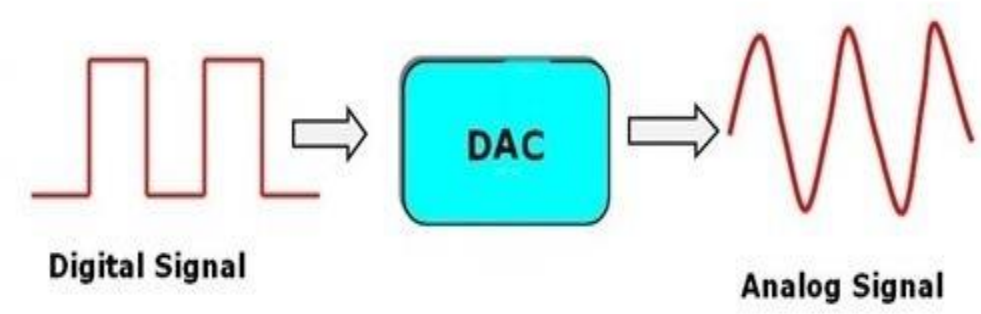

9. A/D CONVERTER:

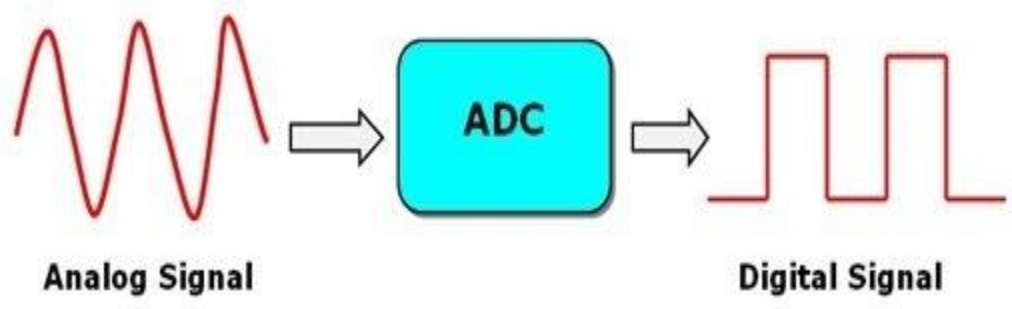

It converts the analog voltage levels to digital voltage values. In PIC Microcontroller, ADC has 8-channels and has resolution of 10-bit, which means that if we have to convert an analog voltage between 0V to 5V the converter will divide it to 2^10 levels (1024 levels). The special function registers ADCON0 and ADCON1 control the operation of ADC. The converter stores the lower 8 bits in ADRESL register and the upper bits in the ADRESH register. Reference voltage of 5V is required for the operation of the converter.