Digital Systems

Dr. Rabih Ali Sbera

Ashur University

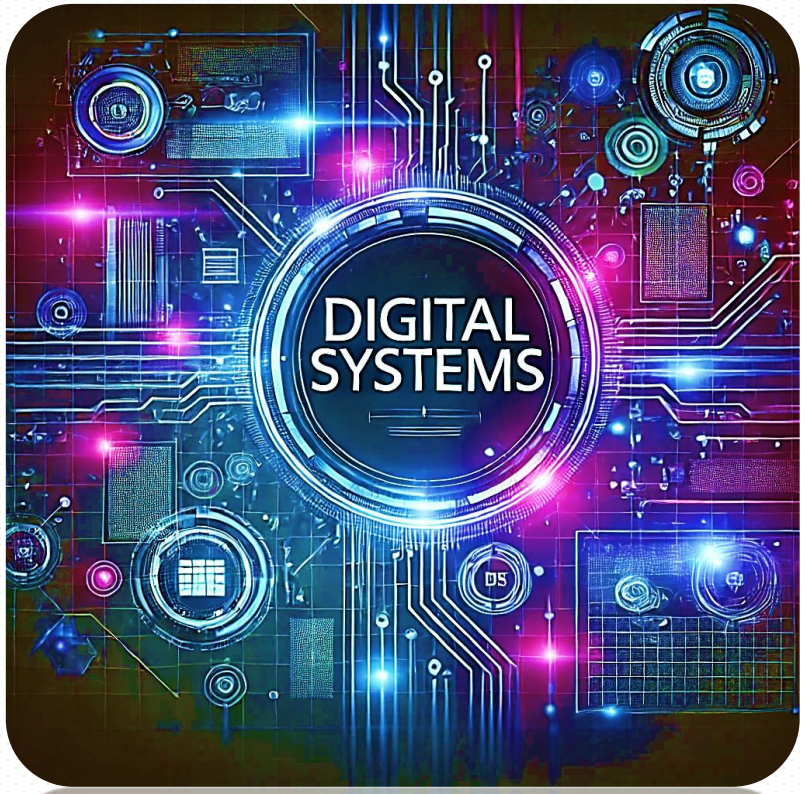

Computer Techniques Engineering Department

Logical Gates work with a clock

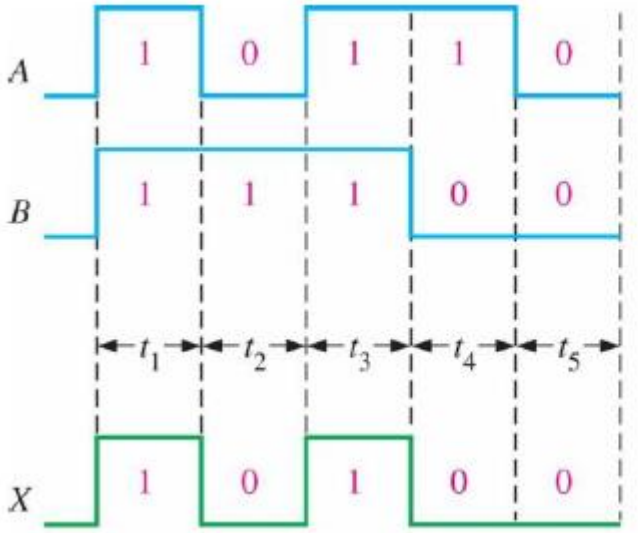

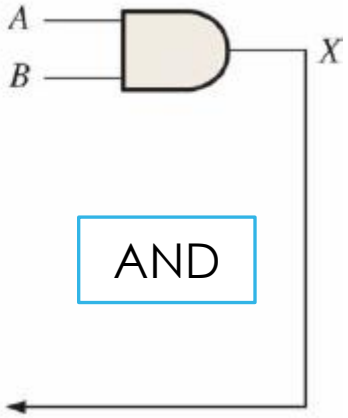

AND

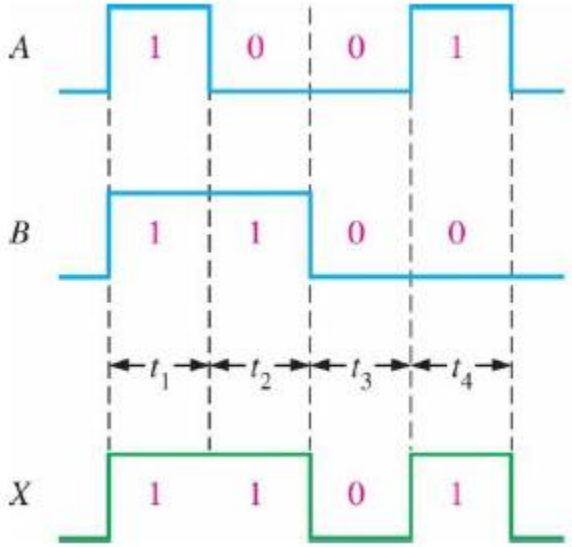

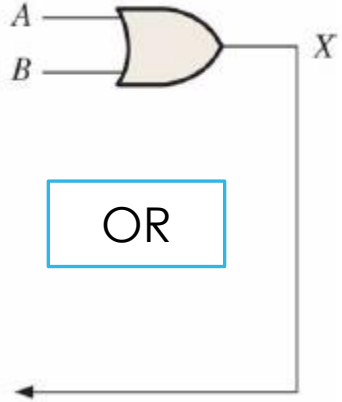

OR

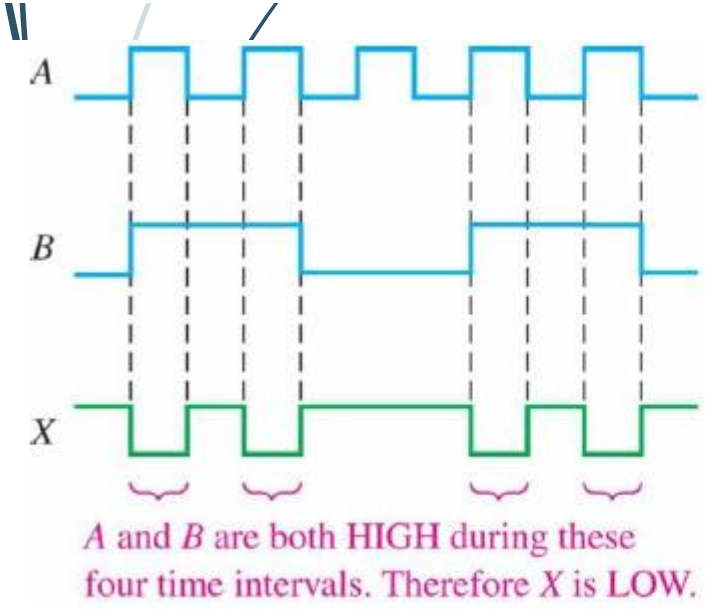

A and *B* are both HIGH during these four time intervals. Therefore *X* is LOW.

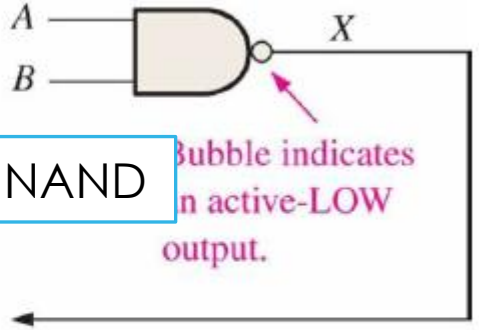

NAND

ubble indicates
n active-LOW
output.

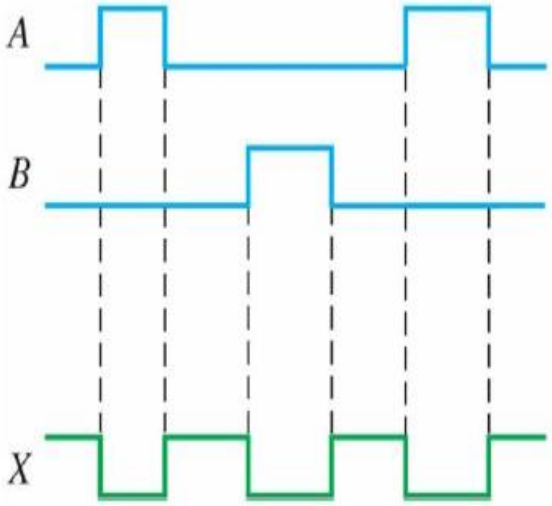

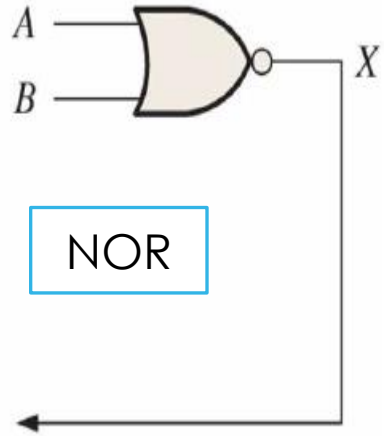

NOR

Logical Gates work with a clock

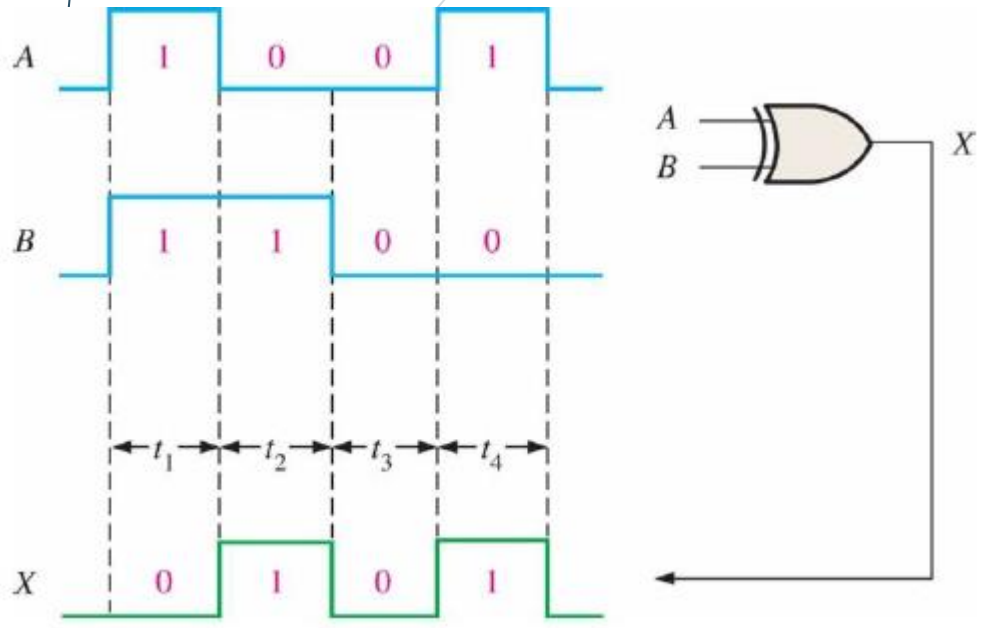

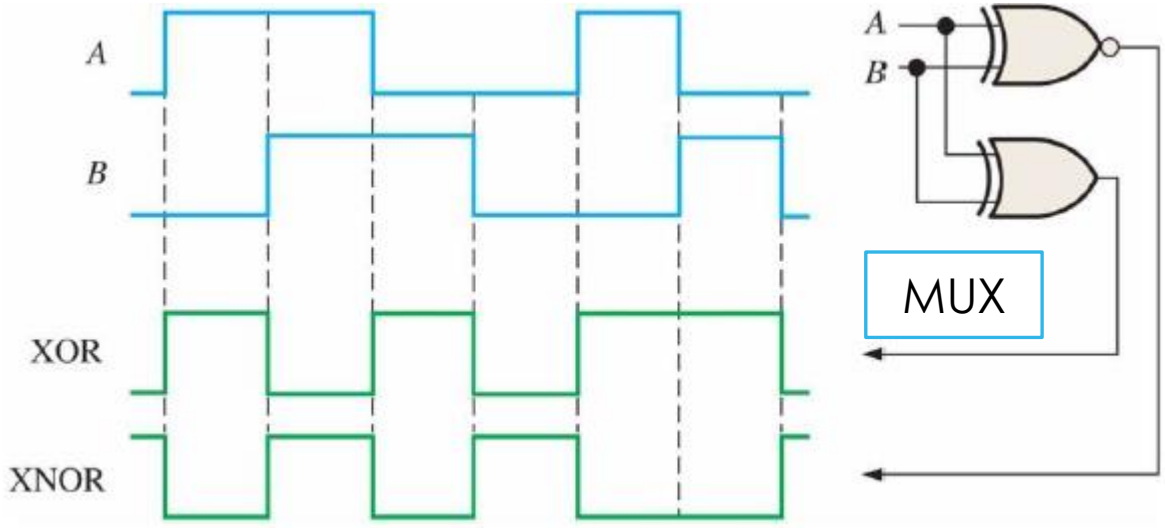

$$X = A \odot B = \overline{A \oplus B} = \overline{A\overline{B} + \overline{A}B} = AB + \overline{A}\,\overline{B}$$

Logical Gates work with a clock

EXAMPLE

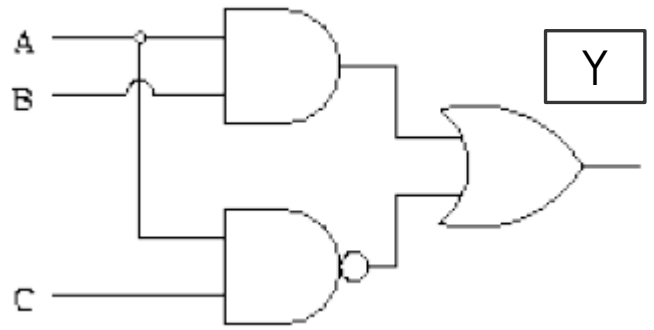

$$Y = A.B + \overline{A.C}$$

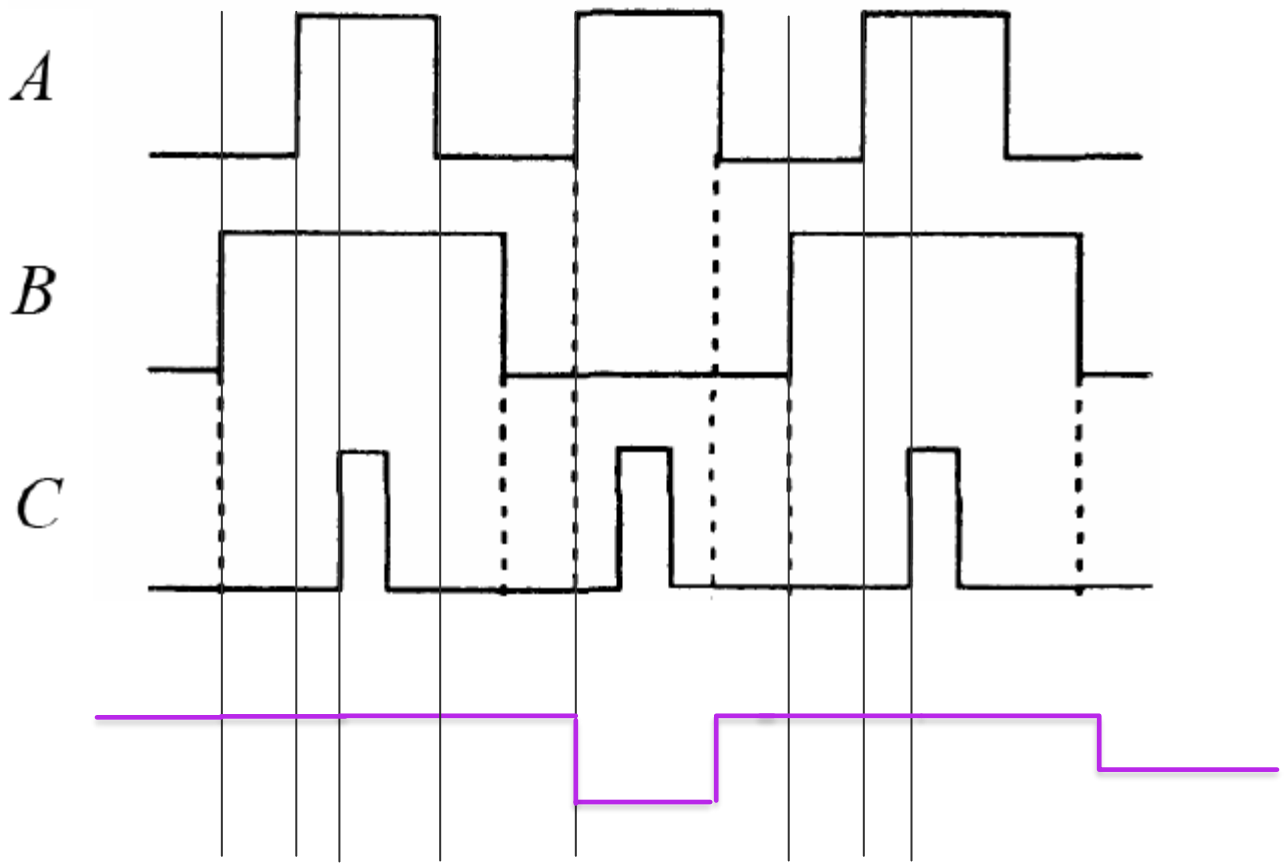

Logical Gates work with a clock

EXAMPLE

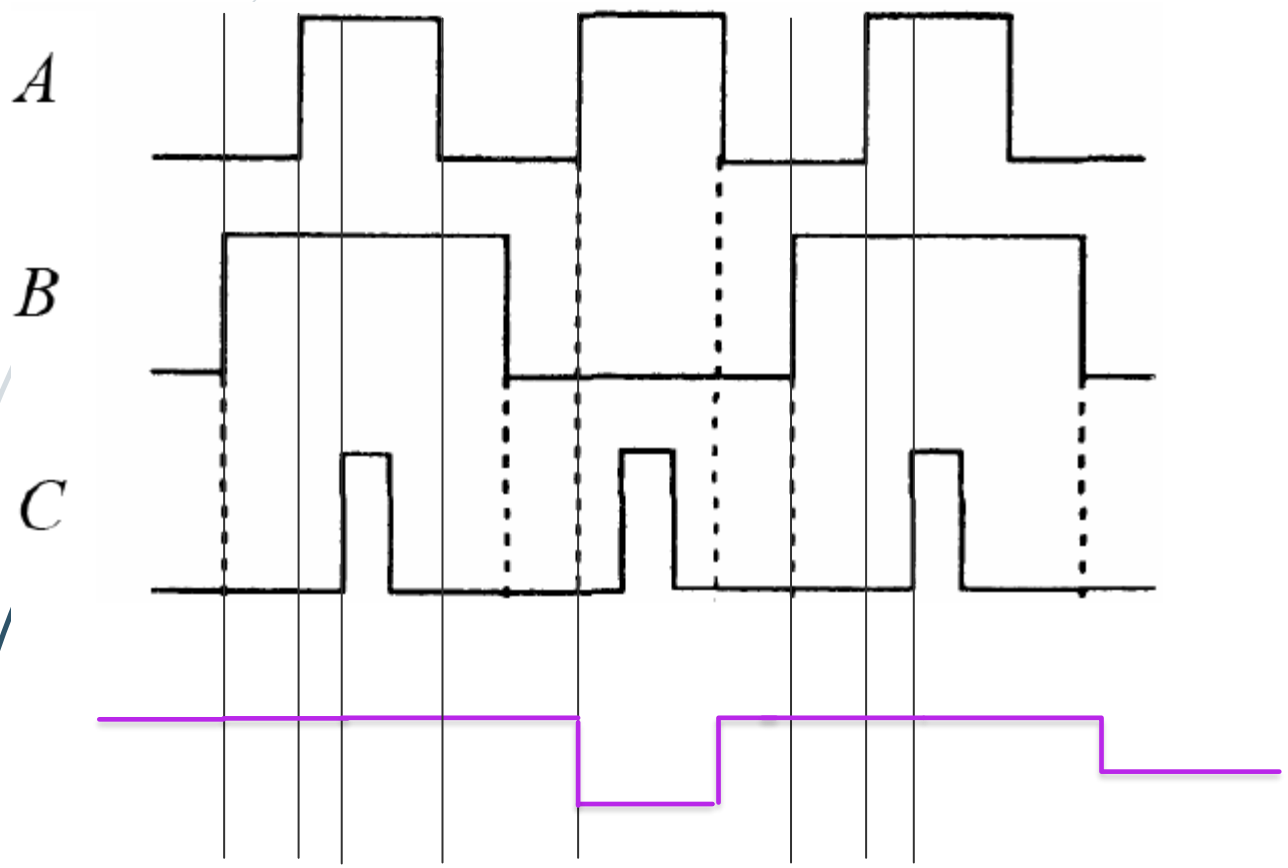

$$Y = A.B + \overline{A.C}$$

C	B	A	Y
0	0	0	1
0	0	1	0
0	1	0	1
0	1	1	1
1	0	0	0
1	0	1	0
1	1	0	0
1	1	1	1

Logical Gates work with a clock

EXAMPLE

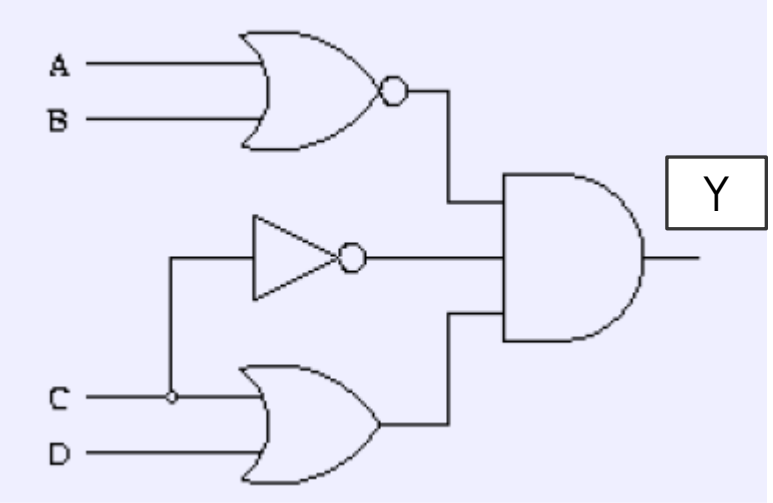

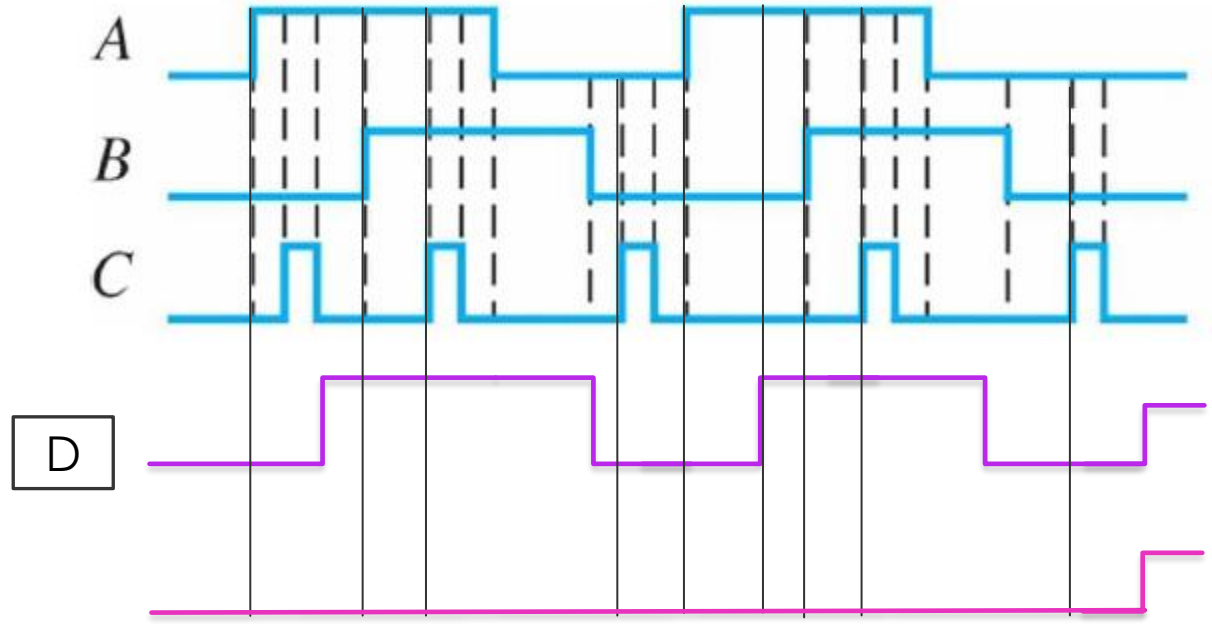

$$Y = \bar{A}.\bar{B}.\bar{C}.D$$

Logical Gates work with a clock

EXAMPLE

$$Y = \bar{A}.\bar{B}.\bar{C}.D$$

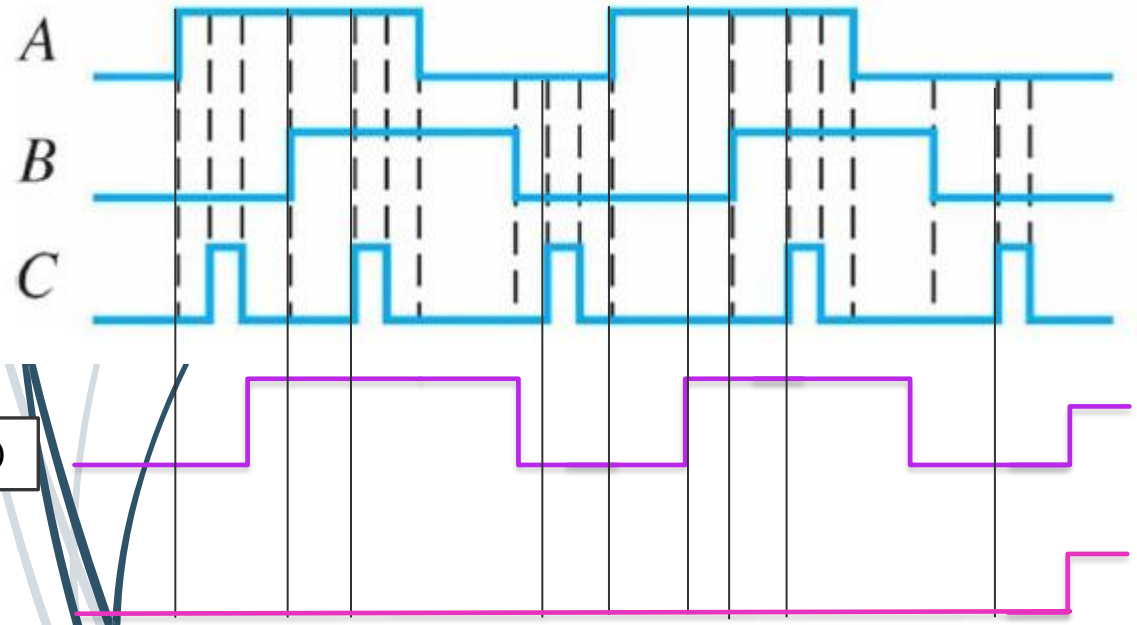

D	C	B	A	Y
0	0	0	0	0
0	0	0	1	0
0	0	1	0	0
0	0	1	1	0
0	1	0	0	0
0	1	0	1	0
0	1	1	0	0
0	1	1	1	0
1	0	0	0	1
1	0	0	1	0
1	0	1	0	0
1	0	1	1	0
1	1	0	0	0
1	1	0	1	0
1	1	1	0	0
1	1	1	1	0