ASHUR UNIVERSITY

COLLEGE of ENGINEERING

Bio Medical Engineering Department

3rd Year

Mechanics of Materials

----------2025----------

Scanned with CamScanner

CHAPTER ONE

STRESS

1-1 Introduction

In mechanics of deformable solids, externally applied forces acts on a body and body suffers a deformation. From equilibrium point of view, this action should be opposed or reacted by internal forces which are set up within the particles of material due to cohesion. These internal forces give rise to a concept of stress. Therefore the term stress is defined:

In figure (1-1) a rectangular bar of some cross–sectional area and subjected to some load or force (in Newton). The same rectangular bar is assumed to be cut into two halves at section XX. Each portion of this rectangular bar is in equilibrium under the action of load P and the internal forces acting at the section XX has been shown.

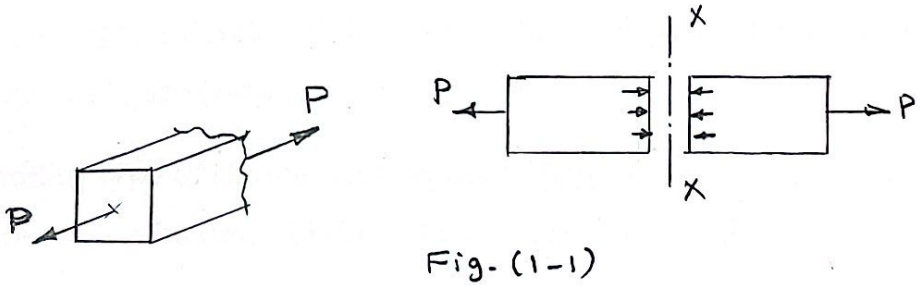

Fig. (1-1)

1-2 Simple Stress

Simple stress is expressed as the ratio of the applied force divided by the resisting area or: $\sigma = \text{Force} / \text{Area}$ $\{N/m^2, Pa\}^*$

$* MPa = 10^6 Pa$, $GPa = 10^9 Pa$, $kPa = 10^3 Pa$, $(Psi \approx lb/in^2)$

Scanned with CamScanner

It is the expression of force per unit area to structural members that are subjected to external forces. Here we are using an assumption that the total force or total load carried by the bar is uniformly distributed over its cross-section. Simple stress can be classified as <u>normal stress</u>, <u>shear stress</u>, and <u>bearing stress</u> as shown in figure (1-2).

Fig. (1-2)

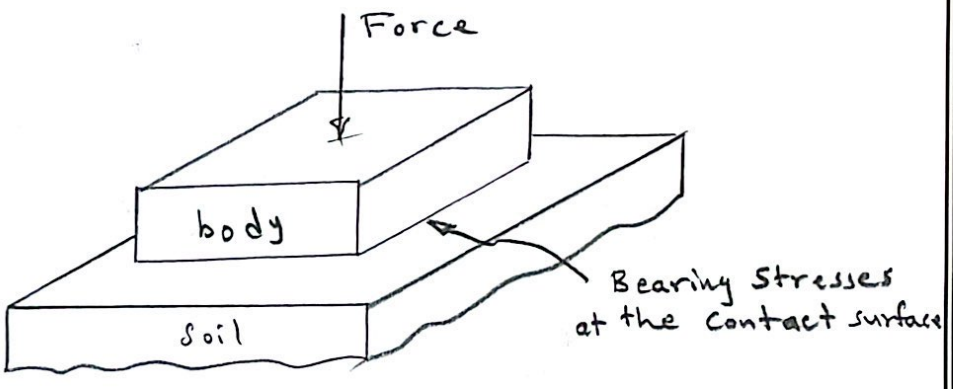

<u>Normal stress</u> develops when a force is applied perpendicular to the cross-sectional area of the material. If the force is going to pull the material, the stress is said to be tensile stress and compressive stress develops when the material is being compressed by two opposing forces as shown in figure (1-3).

<u>Shear stress</u> is developed if the applied force is parallel to the resisting area as shown in figure (1-4). $\sigma = \text{Force} / \text{Area}$

$\sigma = P / A$

Another type of simple stress is the <u>bearing stress</u>; it is the contact pressure between two bodies. (It is in fact a compressive stress).

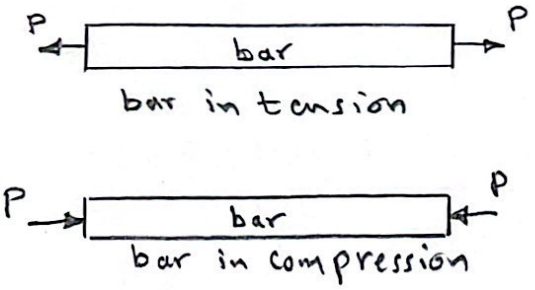

Fig. (1-3)

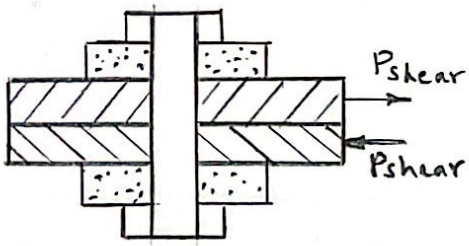

Fig. (1-4)

Scanned with CamScanner

EXAMPLES FOR NORMAL STRESS

Example-1

A hollow steel tube with an inside diameter of 100 mm must carry a tensile load of 400 kN. Determine the outside diameter of the tube if the stress is limited to 120 MN/m2 .

Solution

$P = \sigma A$

where; $P = 400\ kN = 400\,000\ N$

$\sigma = 120\ MPa$

$A = \frac{1}{4}\pi D^2 - \frac{1}{4}\pi (100)^2$

$= \frac{1}{4}\pi (D^2 - 10\,000)$

$\therefore 400\,000 = 120 \left[\frac{1}{4}\pi (D^2 - 10000)\right]$

$D^2 = 119.35\ mm$ (Ans.)

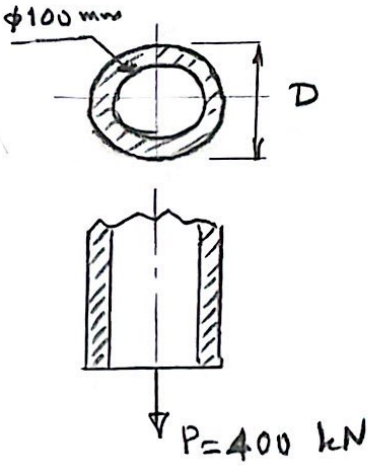

Example-2

A homogeneous 800 kg bar AB is supported at either end by a cable as shown in Figure. Calculate the smallest area of each cable if the stress is not to exceed 90 MPa in bronze and 120 MPa in steel.

Solution

By symmetry

$P_{br} = P_{st} = \frac{1}{2}(7848)$

$= 3924\ N$

For bronze cable:

$P_{br} = \sigma_{br} A_{br}$

$3924 = 90\ A_{br} \Rightarrow \therefore A_{br} = 43.6\ mm^2$

For steel Cable:

$P_{st} = \sigma_{st} A_{st}$

$3924 = 120\ A_{st}$

$\therefore A_{st} = 32.7\ mm^2$

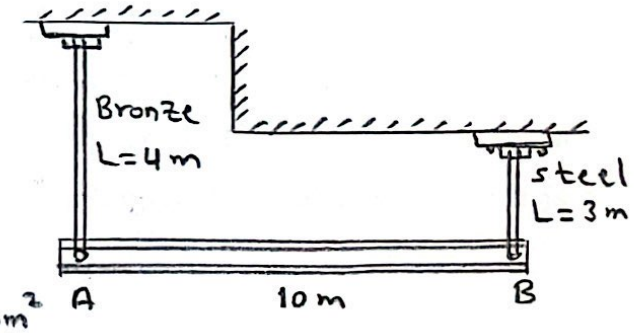

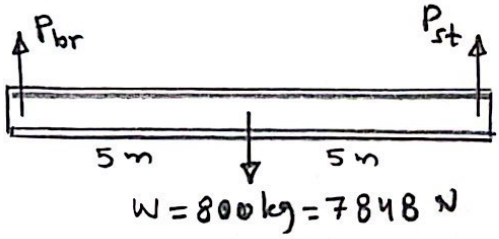

Scanned with CamScanner

Example-3

An aluminum rod is rigidly attached between a steel rod and a bronze rod as shown in Figure. Axial loads are applied at the positions indicated. Find the maximum value of P that will not exceed a stress in steel of 140 MPa, in aluminum of 90 MPa, or in bronze of 100 MPa.

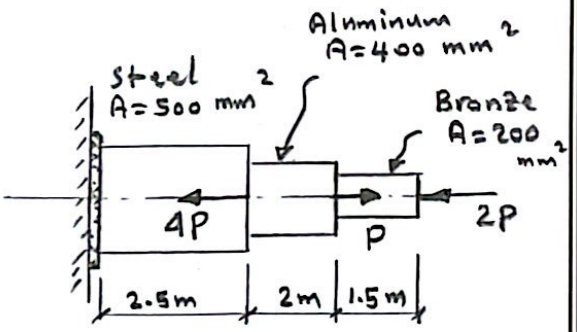

Solution

For Bronze

$\sigma_{br} \cdot A_{br} = 2P$

$100\ (200) = 2P$

$\therefore P = 10\,000\ N$

For Aluminum

$\sigma_{Al} \cdot A_{Al} = P$

$90\ (400) = P$

$\therefore P = 36\,000\ N$

For steel

$\sigma_{st} \cdot A_{st} = 5P$

$\therefore P = 14\,000\ N$

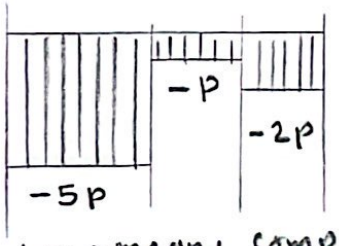

(-ve) means compression

For safe P, use $P = 10\,000\ N = 10\ kN$ (Ans.)

Example -4

12-inches square steel bearing plate lies between an 8-inches diameter wooden post and a concrete footing as shown in Figure. Determine the maximum value of the load P if the stress in wood is limited to 1800 psi and that in concrete to 650 psi.

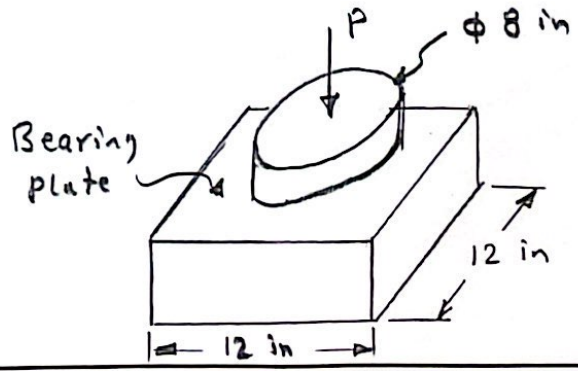

Scanned with CamScanner

EXAMPLES FOR SHEARING STRESS

Forces parallel to the area resisting the force cause shearing stress. It differs to tensile and compressive stresses, which are caused by forces perpendicular to the area on which they act. Shearing stress is also known as tangential stress as shown in figure (1-5).

$$\tau = F / A$$

where F is the resultant shearing force which passes through the centroid of the area A being sheared.

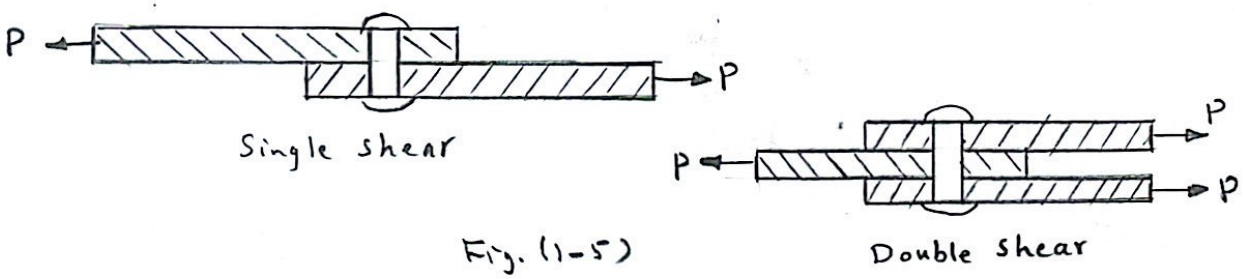

Fig. (1-5)

Example -5

What force is required to punch a 20-mm-diameter hole in a plate that is 25 mm thick as shown in figure? The shear strength is 350 MN/m2 .

Solution

The resisting area is the shaded area along the perimeter and the shear force F is equal to the punching force P.

$F = \tau . A$

$P = 350 \{\pi (20)(25)\}$

$= 549778.7$ N

$= 549.8$ kN (Ans.)

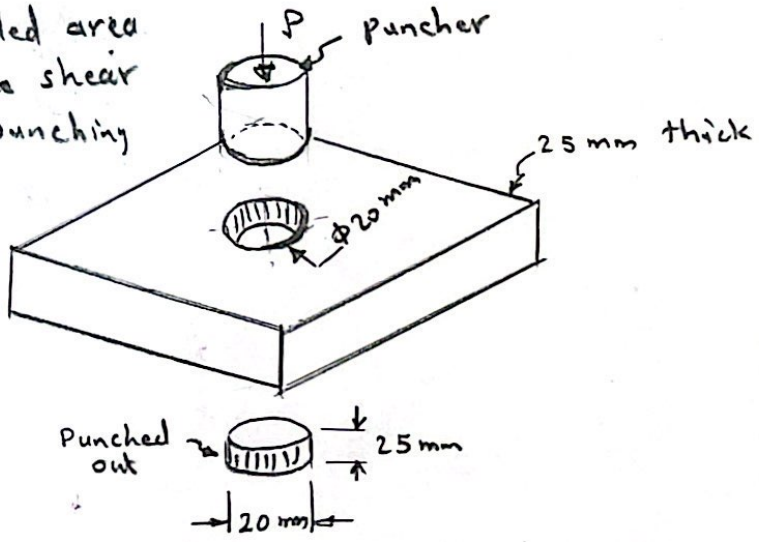

Scanned with CamScanner

Example -6

Find the smallest diameter bolt that can be used in the clevis as shown in figure if P = 400 kN. The shearing strength of the bolt is 300 MPa.

Solution

The bolt is subjected to double shear

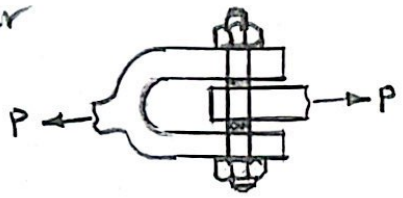

$F = \tau . A$

$400(1000) = 300\left\{2\left(\frac{\pi d^2}{2}\right)\right\}$

$\therefore d = 29.13$ mm (Ans.)

Example -7

Compute the shearing stress in the pin at B for the member supported as shown in Figure. The pin diameter is 20 mm.

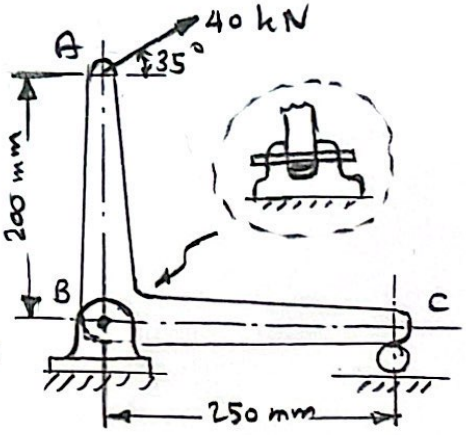

Solution

From FBD:

$\Sigma M_c = 0$

$0.25 R_{BV} = 0.25(40 \sin 35^\circ) + 0.2(40 \cos 35^\circ)$

$\therefore R_{BV} = 49.156$ kN

$\Sigma F_H = 0$

$R_{BH} = 40 \cos 35^\circ$

$= 32.766$ kN

$\therefore R_B = \sqrt{32.766^2 + 49.156^2} = 59.076$ kN

Shear force of pin (B)

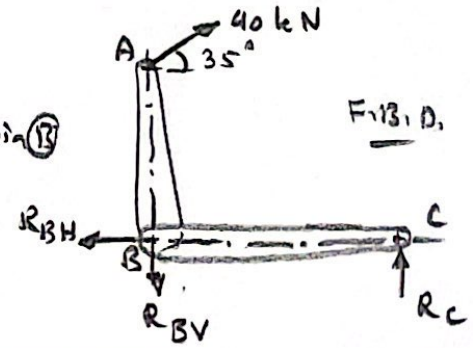

$F_B = \tau_B . A$

$59.076(1000) = \tau_B \left\{2\left(\frac{\pi 20^2}{4}\right)\right\}$

$\therefore \tau_B = 94.02$ MPa

Scanned with CamScanner