
LECTURE 3: Components of Forces

1. Determining the Components of a Force

Dimensions are not always given in horizontal and vertical directions, angles need not be measured counterclockwise from the x-axis, and the origin of coordinates need not be on the line of action of a force.

Therefore, it is essential that we be able to determine the correct components of a force no matter how the axes are oriented or how the angles are measured. Fig. 1 suggests a few typical examples of vector resolution in two dimensions.

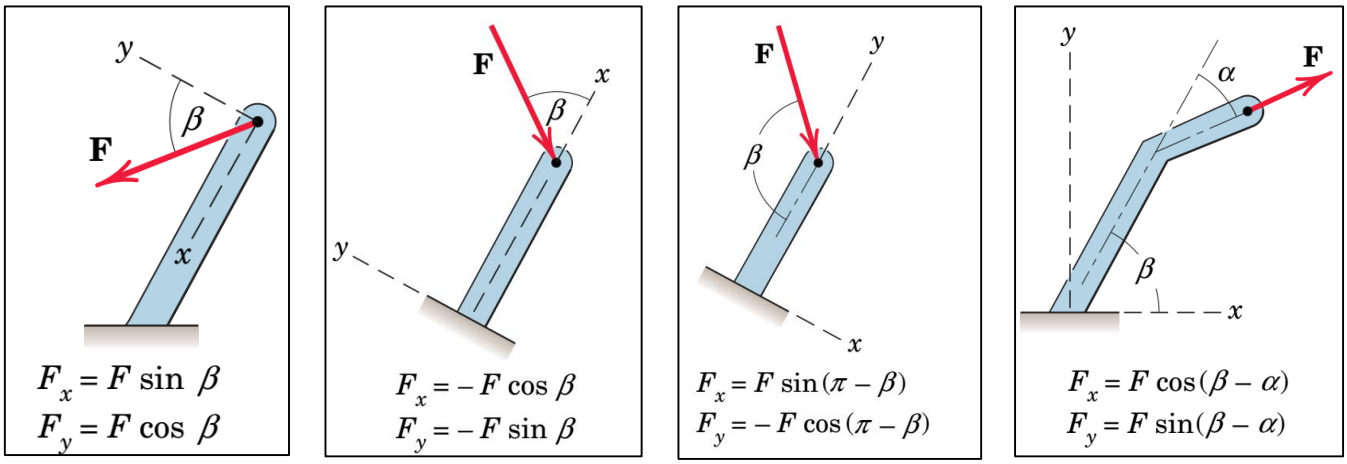

Fig. 1

Rectangular components are convenient for finding the sum or resultant R of two forces which are concurrent. Consider two forces $F1$ and $F2$ which are originally concurrent at a point O. Fig. 2 shows the line of action of $F2$ shifted from O to the tip of $F1$ according to the triangle rule of Fig. 2.

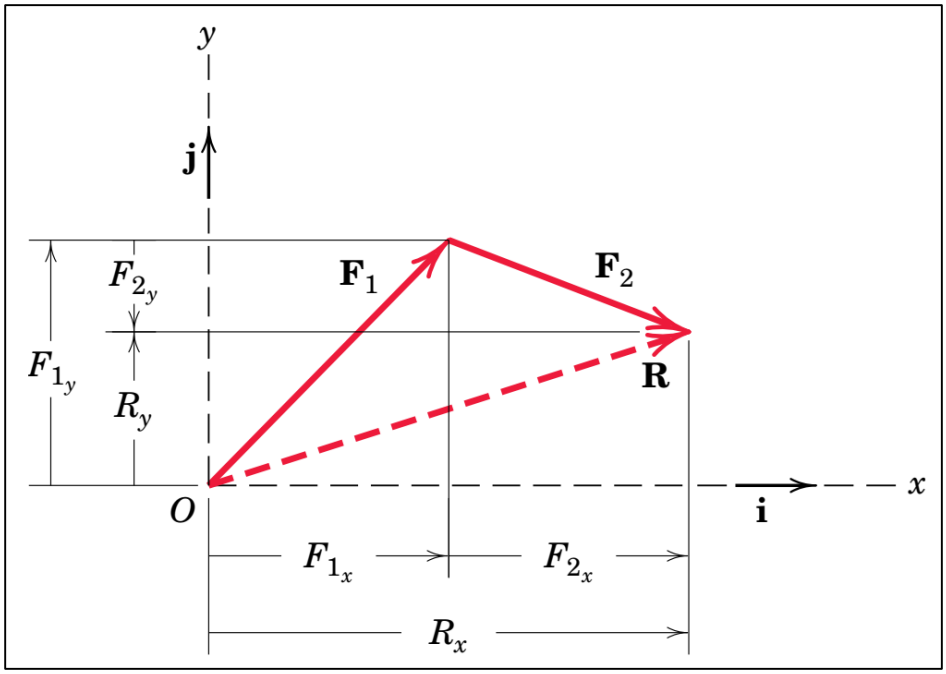

Fig. 2

In adding the force vectors $F1$ and $F2$, we may write

$$R = F_1 + F_2 = \left(F_{1x}i + F_{1y}j\right) + \left(F_{2x}i + F_{2y}j\right)$$

Or

$$R_x i + R_y j = (F_{1x} + F_{2x})i + \left(F_{1y} + F_{2y}\right)j$$

From which we conclude that

$$R_x = F_{1x} + F_{2x} = \sum F_x$$

$$R_y = F_{1y} + F_{2y} = \sum F_y$$

The term $\sum F_x$ means "the algebraic sum of the x scalar components".

Example 1:

Combine the two forces **P** and **T**, which act on the fixed structure at B, into a single equivalent force **R**.

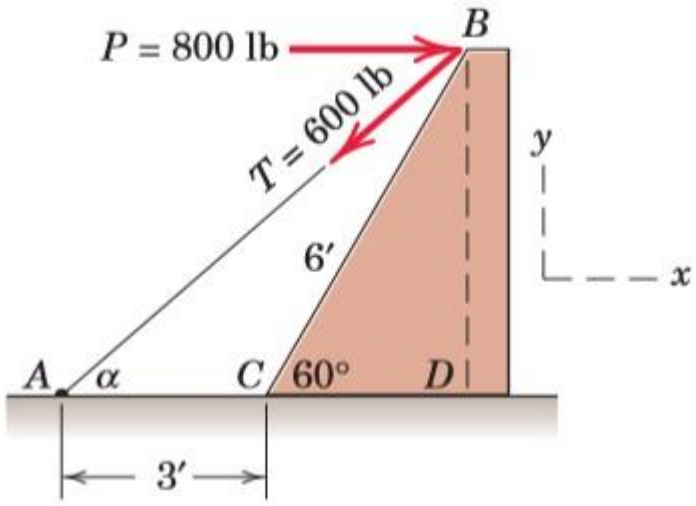

Solution:

1- Graphical solution.

The parallelogram for the vector addition of forces T and P is constructed as shown in Fig. below. The scale used here is 1 in. = 800 lb; a scale of 1 in. = 200 lb would be more suitable for regular-size paper and would give greater accuracy. Note that the angle α must be determined prior to construction of the parallelogram. From the given figure:

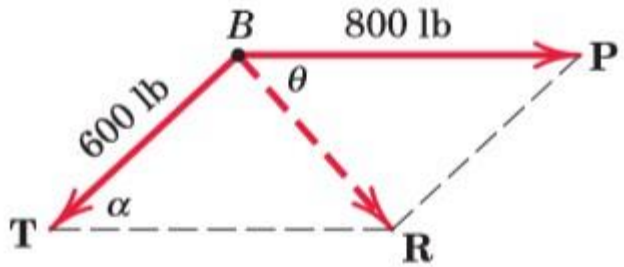

$$\tan\alpha = \frac{\overline{BD}}{\overline{AD}} = \frac{6\sin 60^\circ}{3 + 6\cos 60^\circ} = 0.866 \qquad \alpha = 40.9^\circ$$

Measurement of the length R and direction θ of the resultant force **R** yields the approximate results

$$R = 525 \text{ lb} \qquad \theta = 49^\circ \qquad \textit{Ans.}$$

2- Geometric solution.

The triangle for the vector addition of **T** and **P** is shown in Fig. below. The angle α is calculated as above.

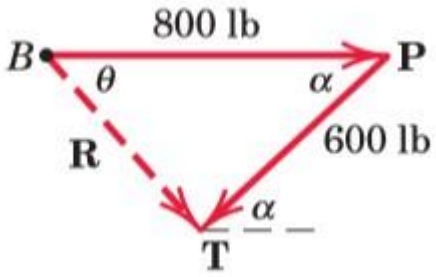

The law of cosines gives:

$$R^2 = (600)^2 + (800)^2 - 2(600)(800)\cos 40.9^\circ = 274{,}300$$

$$R = 524 \text{ lb} \qquad \textit{Ans.}$$

From the law of sines, we may determine the angle θ which orients **R**. Thus,

$$\frac{600}{\sin\theta} = \frac{524}{\sin 40.9^\circ} \qquad \sin\theta = 0.750 \qquad \theta = 48.6^\circ \qquad \textit{Ans.}$$

1- Algebraic solution.

By using the x-y coordinate system on the given figure, we may write:

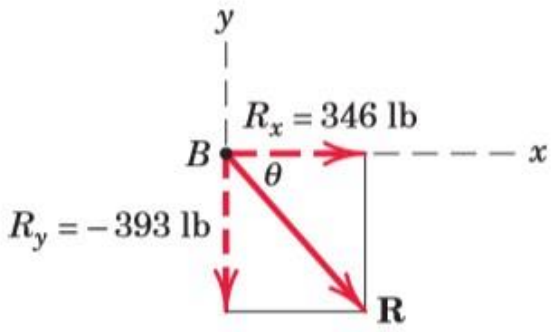

$$R_x = \Sigma F_x = 800 - 600 \cos 40.9° = 346 \text{ lb}$$

$$R_y = \Sigma F_y = -600 \sin 40.9° = -393 \text{ lb}$$

The magnitude and direction of the resultant force **R** as shown in Fig. *c* are then

$$R = \sqrt{R_x^2 + R_y^2} = \sqrt{(346)^2 + (-393)^2} = 524 \text{ lb} \qquad \textit{Ans.}$$

$$\theta = \tan^{-1} \frac{|R_y|}{|R_x|} = \tan^{-1} \frac{393}{346} = 48.6° \qquad \textit{Ans.}$$

The resultant **R** may also be written in vector notation as

$$\mathbf{R} = R_x\mathbf{i} + R_y\mathbf{j} = 346\mathbf{i} - 393\mathbf{j} \text{ lb} \qquad \textit{Ans.}$$

H.W. 1:

The two structural members, one of which is in tension and the other in compression, exert the indicated forces on joint *O*. Determine the magnitude of the resultant **R** of the two forces and the angle θ which **R** makes with the positive *x*-axis.

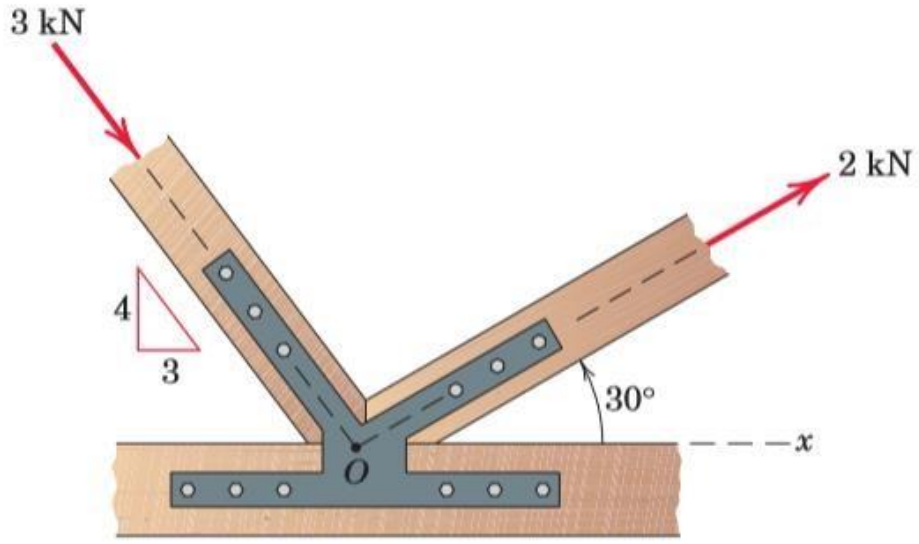

Ans.:

$$R = 3.80 \text{ kN}, \theta = 338° \text{ (or } -21.6°)$$

H.W. 2:

The t-component of the force **F** is known to be 75 N. Determine the n-component and the magnitude of **F**.

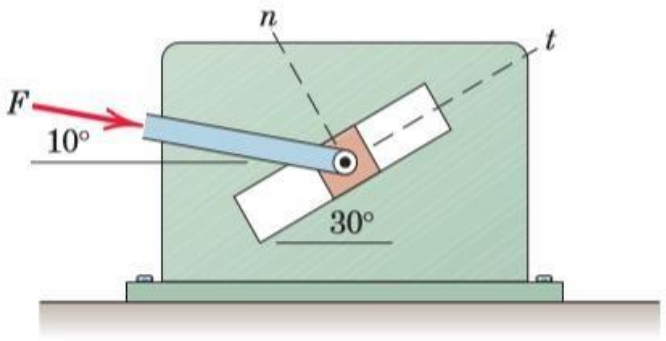

Ans.: $F_n = -62.9 \text{ N}, F = 97.9 \text{ N}$

H.W. 3:

The cable AB prevents bar OA from rotating clockwise about the pivot O. If the cable tension is 750 N, determine the n- and t-components of this force acting on point A of the bar.

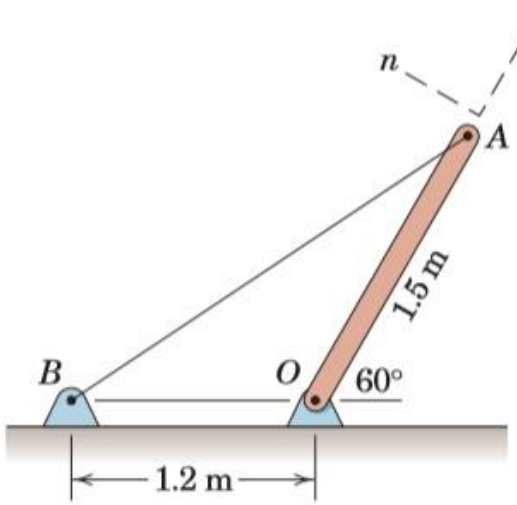

Ans.:

$$T_n = 333 \text{ N}, T_t = -672 \text{ N}$$

H.W. 4:

In the design of the robot to insert the small cylindrical part into a close-fitting circular hole, the robot arm must exert a 90-N force P on the part parallel to the axis of the hole as shown. Determine the components of the force which the part exerts *on* the robot along axes (a) parallel and perpendicular to the arm AB, and (b) parallel and perpendicular to the arm BC.

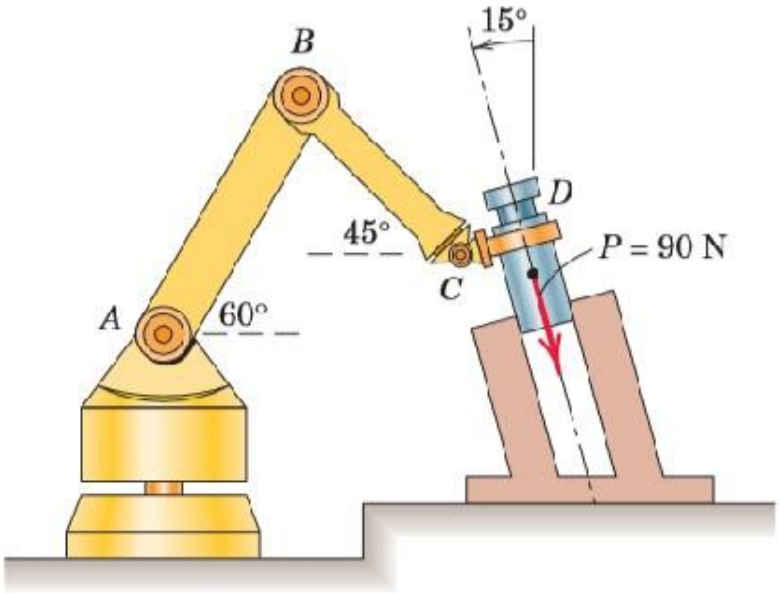

Ans.:

$$BC: P_t = -77.9 \text{ N}, P_n = 45.0 \text{ N}$$
$$AB: P_t = 63.6 \text{ N}, P_n = 63.6 \text{ N}$$

H.W. 5:

The force F has a magnitude of 800 N. Express F as a vector in terms of the unit vectors i and j. Identify the x and y scalar components of F.

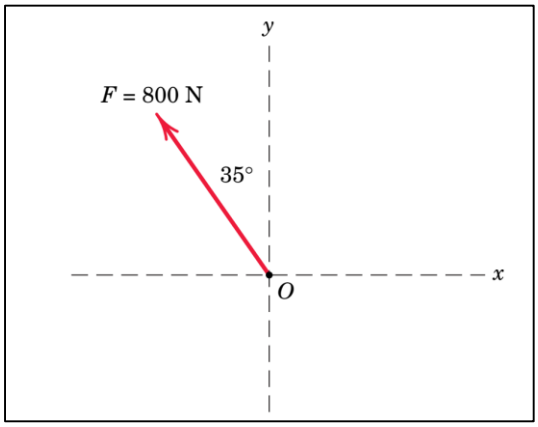

H.W. 6: The 500-N force F is applied to the vertical pole as shown.

(1) Write F in terms of the unit vectors i and j and identify both its vector and scalar components.

(2) Determine the scalar components of the force vector F along the x'- and y'-axes.

(3) Determine the scalar components of F along the x- and y'-axes.

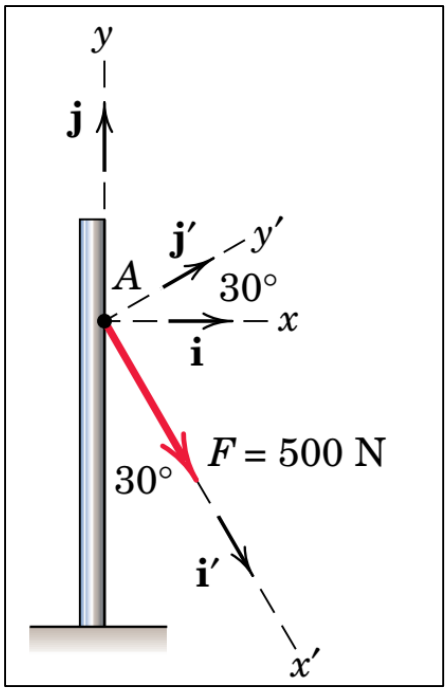

//

Reference: Engineering Mechanics, Statics, J. L. Meriam and L. G. Kraige, John Wiley & Sons, Inc